brand	BERNARD LOISIRS

date	JAN/02	SHEET 1/16

Model

BL 10567 10.5HP

9538782-09

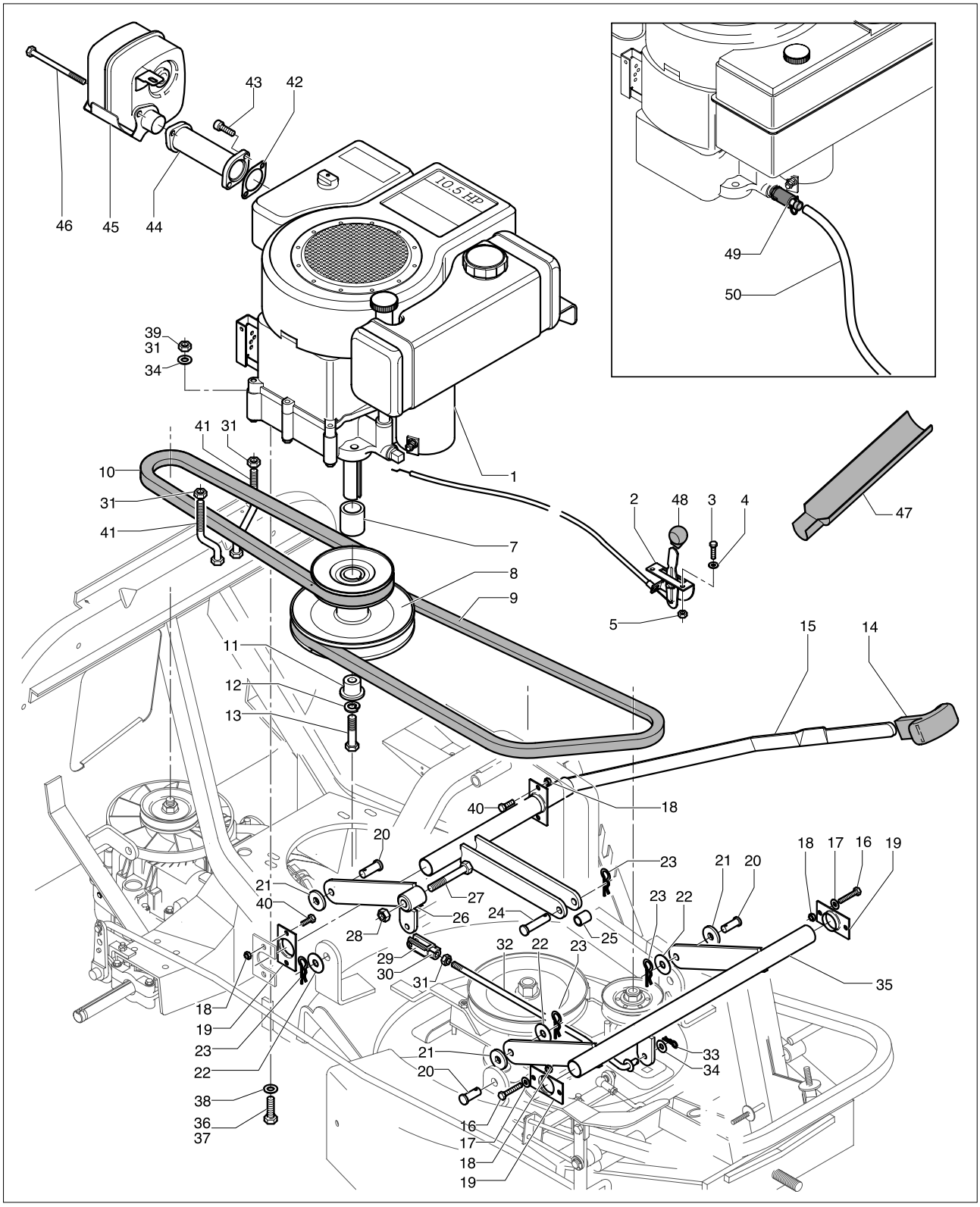

BERNARD Loisirs

brand	BERNARD LOISIRS

date	JAN/02	SHEET 2/16

BL 10567 10.5 HP

Pos	PN ELX	PN MEP	Q.ty	Note
1	531200413	BS28B707	1	B&S 10.5 HP I/C A.E.
2	531206972	10303430	1	
3	531207838	10830300	2	TE M5x16 UNI 5739-8,8-ZB
4	531207786	10805000	2	5x10x1
5	531208492	20282100	2	M5 H7 UNI7473-ZB
7	531207030	10330370	1	
8	531211155	10330490	1	
9	531211153	10330480	1	
10	531207010	10330130	1	X13-845 Lp
11	531206857	10301900	1	INF.12X25,3X23,5 Z
12	531206859	10301920	1	D.12 UNI 7980 ZNT
13	531206858	10301910	1	TE 7/16" UNIF L=2"
14	531207024	10330253	1	
15	531206767	10300650	1	
16	531208425	20228705	4	TE M6x35 UNI 5737-8,8-ZB
17	531205377	10126000	3	6x18x1,5
18	531208491	20281800	8	M6 H8 UNI7473-ZB
19	531206770	10300680	3	
20	531206913	10302720	3	D.10x28
21	531206809	10301170	3	D.10,3X30X3
22	531207989	20113000	3	10x30x2,5
23	531206917	10302760	4	D.2.5x50 CE
24	531206912	10302710	1	D.10x45
25	531206875	10302240	1	D.11x14x19
26	531206807	10301150	1	
27	531206780	10300830	1	TSPEI M10X70 UNI5933 ZNT
28	531207161	10501160	1	M10 H12 UNI7473-ZB
29	531206797	10301020	1	M8x32 UNI1676 L=58
30	531206814	10301220	1	M8
31	531207982	20106300	2	M8 H8 UNI 5587-6S ZB
32	531206795	10301000	1	
33	531206653	10281400	1	1,8 x 33
34	531204922	10114200	5	8x16x1,5 ZB
35	531206812	10301200	1	
36	531205196	10121700	3	TE M8x35 UNI 5739-8,8-ZB
37	531206945	10303090	1	TE M8X50-8.8-UNI5739 ZB
38	531204904	10066300	4	8x24x2
39	531208599	20404900	3	M8 H10 UNI7473-ZB
40	531208660	20501370	4	TE M6x20 UNI 5739-8,8-ZB
41	531206961	10303280	2	
42	531208565	20303220	1	B&S
43	531206914	10302730	2	TCEI 5/16"UNCX 5/8"(15,87)
44	531208548	20301850	1	B&S 28D
45	531208563	20303200	1	
46	531208564	20303210	2	B&S
47	531207031	10330383	1	
48	531206970	10303403	1	
49	531206976	10303460	1	
50	531206978	10303480	1	D17/12

brand	BERNARD LOISIRS

date	JAN/02	SHEET 3/16

Model

BL 10567 10.5HP

9538782-09

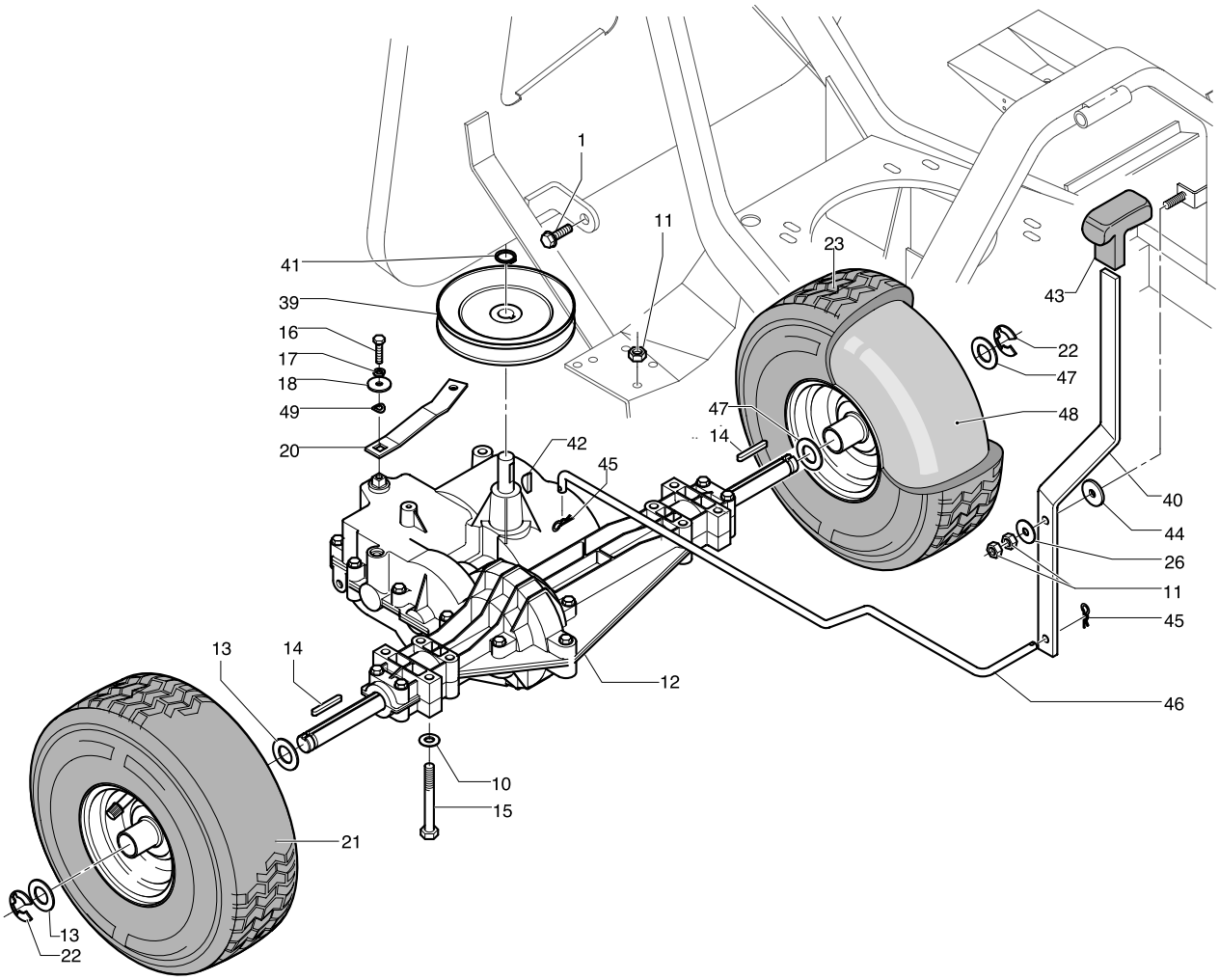

BERNARD Loisirs

brand	BERNARD LOISIRS

date	JAN/02	*SHEET 4/16*

BL 10567 10.5 HP

Pos	PN ELX	PN MEP	Q.ty	Note
1	531206922	10302810	1	TE M8x20 TRILOBATA
10	531204922	10114200	8	8x16x1,5 ZB
11	531208599	20404900	9	M8 H10 UNI7473-ZB
12	531207003	10330050	1	MST 205/542D
13	531206725	10300160	3	ITT 20,2x30x1
14	531206726	10300180	2	5x4,7x40
15	531206681	10291000	8	TE M8x60 UNI 5737-8,8-ZB
16	531206803	10301080	2	TE 1/4" UNF 5/8"(16)-8.8G
17	531206731	10300230	1	D.6 DIN128 TIPO B ZNT
18	531207860	10832200	1	6x24x2
20	531207022	10330233	1	
21	531206710	10300000	1	DX (YELLOW)
21	531206709	1030000E	1	DX (GREY)
22	531206727	10300190	2	DIN 6799 D.15
23	531206712	10300010	1	15x6 SX (YELLOW)
23	531206711	1030001E	1	15X6 SX (GREY)
26	531204904	10066300	1	8x24x2
39	531207007	10330100	1	
40	531207014	10330162	1	
41	531208451	20231200	1	D 15/E
42	531207026	10330270	1	4,75X7,6X18,6
43	531207024	10330253	1	
44	531207027	10330290	1	MM.D.8,5X27X
45	531206653	10281400	2	1,8 x 33
46	531207016	10330170	1	
47	531207025	10330260	1	D. 20,5/30/0,3-C72
48	531208576	20330310	2	

brand	BERNARD LOISIRS

date	JAN/02	SHEET 5/16

Model

BL 10567 10.5HP

9538782-09

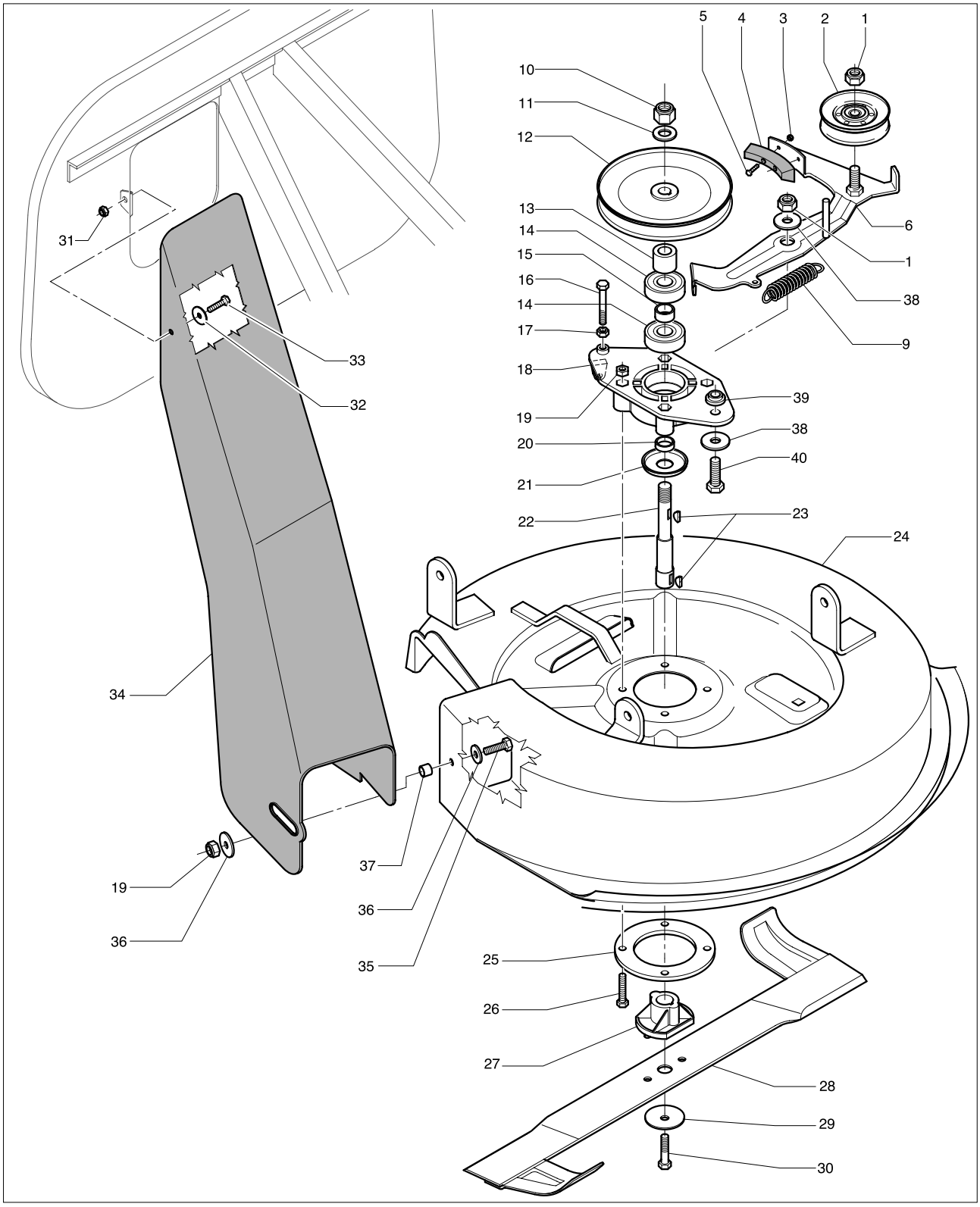

BERNARD Loisirs

brand	BERNARD LOISIRS

date	JAN/02	SHEET 6/16

BL 10567 10.5 HP

Pos	PN ELX	PN MEP	Q.ty	Note
1	531206835	10301560	2	M12 ALTO CL.6
2	531206834	10301550	1	
3	531208492	20282100	2	M5 H7 UNI7473-ZB
4	531206836	10301570	1	
5	531207838	10830300	1	TE M5x16 UNI 5739-8,8-ZB
6	531206833	10301510	1	
9	531206896	10302640	1	D.22x104x2.8
10	531206831	10301490	1	M16 UNI 7473 CL.8.8 AUTO
11	531206744	10300380	1	D17x30x2.5 UNI6592 ZNT
12	531206829	10301470	1	D.178 FORO D.16
13	531206828	10301460	1	D.17x30x25,5 ZNT
14	531206830	10301480	2	6304-2RS
15	531206818	10301360	1	
16	531207105	10407600	1	TE M8x70 UNI 5737-8,8-ZB
17	531207982	20106300	1	M8 H8 UNI 5587-6S ZB
18	531206934	10302980	1	
19	531208599	20404900	5	M8 H10 UNI7473-ZB
20	531206821	10301390	1	D.20x25x7
21	531206823	10301410	1	
22	531206819	10301370	1	
23	531204907	10100900	2	4x6,5 UNI6606 WODRUF
24	531206816	10301303	1	
25	531206822	10301400	1	
26	531204905	10069100	4	TE M8x45 UNI 5739-8,8-ZB
27	531206824	10301420	1	
28	531211151	10330500	1	
29	531207237	10530900	1	11x50x2,5
30	531208008	20120580	1	TE 3/8 UNFx37-8,8 1/2F ZB
31	531208491	20281800	1	M6 H8 UNI7473-ZB
32	531207860	10832200	1	6x24x2
33	531208053	20122600	1	M6x20 TE FL
34	531206840	10301653	1	TE M8x35 UNI 5739-8,8-ZB
35	531205196	10121700	1	
36	531206842	10301670	2	D.8.5x32x2.5 UNI6593
37	531206838	10301600	1	D.10X14X16 ZNT
38	531206943	10303070	2	D.12,5X36X2,5 Z
39	531206942	10303060	1	
40	531206944	10303080	1	TE M12X35-8.8-UNI5739 ZB

brand	BERNARD LOISIRS

date	JAN/02	SHEET 7/16

Model

BL 10567 10.5HP

9538782-09

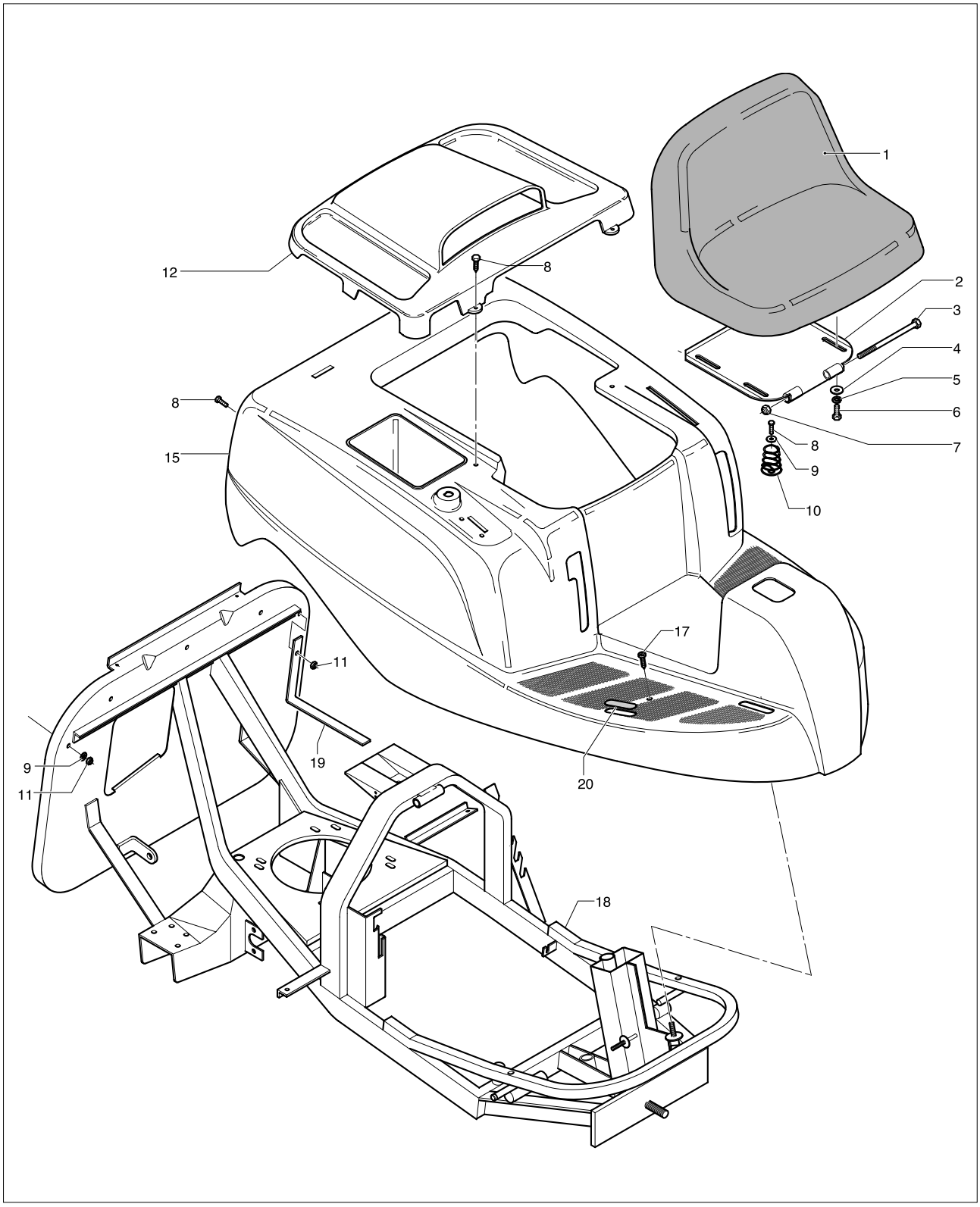

BERNARD Loisirs

brand	BERNARD LOISIRS

date	JAN/02	*SHEET 8/16*

BL 10567 10.5 HP

Pos	PN ELX	PN MEP	Q.ty	Note
1	531206880	10302593	1	
2	531206877	10302563	1	
3	531206878	10302570	1	M8x150 UNI5737 ZNT
4	531204904	10066300	4	8x24x2
5	531206617	10239900	4	8E
6	531208585	20382300	4	TE M8x20 UNI 5739-8.8-ZB
7	531208599	20404900	1	M8 H10 UNI7473-Z
8	531208053	20122600	7	M6x20 TE FL
9	531207860	10832200	6	6x24x2
10	531206879	10302580	1	
11	531208491	20281800	6	M6 H8 UNI7473-ZB
12	531206998	10330020	1	
15	531210791	10330461	1	
17	531206903	10302660	2	D.6x25 ZNT SPECIAL
18	531206933	10302973	1	
19	531206894	10302630	1	
20			1	

brand	BERNARD LOISIRS

date	JAN/02	SHEET 9/16

Model

BL 10567 10.5HP

9538782-09

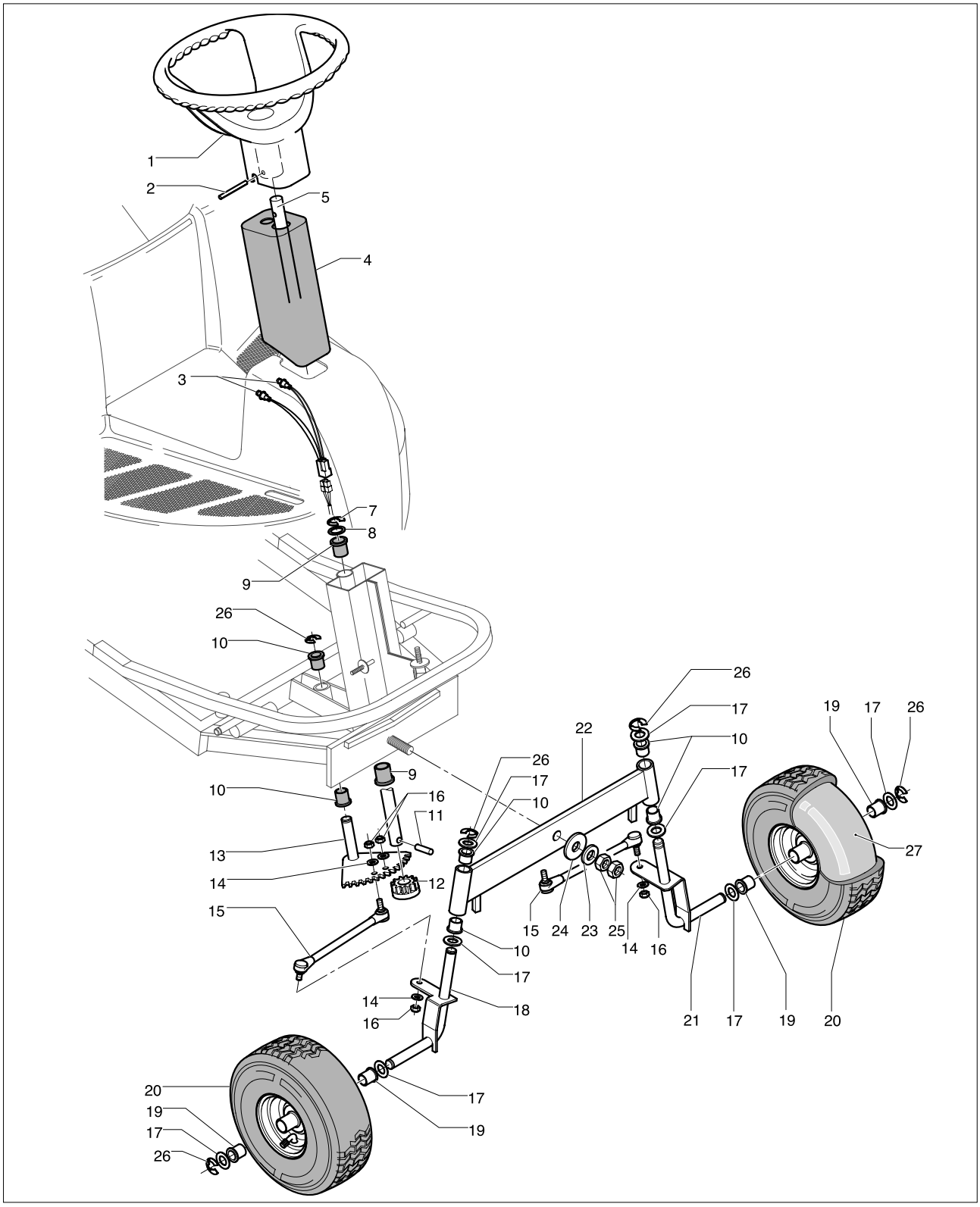

BERNARD Loisirs

brand	BERNARD LOISIRS

date	JAN/02	*SHEET10/16*

BL 10567 10.5 HP

Pos	PN ELX	PN MEP	Q.ty	Note
1	531206749	10300453	1	D.340 N.2 RAZZE
2	531206750	10300460	1	6x60
3	531206929	10302920	1	
4	531207002	10330043	1	
5	531206751	10300470	1	D.20x590
7	531206727	10300190	1	DIN 6799 D.15
8	531206725	10300160	1	ITT 20,2x30x1
9	531206757	10300530	2	20x25x30
10	531206742	10300360	6	D.16,25X20=
11	531206756	10300520	1	8x36 UNI6875
12	531206753	10300490	1	M.3.5
13	531206747	10300430	1	
14	531206617	10239900	4	8E
15	531206745	10300410	2	
16	531207982	20106300	4	M8 H8 UNI 5587-6S ZB
17	531206744	10300380	8	D17x30x2.5 UNI6592 ZNT
18	531206737	10300300	1	DX
19	531208555	20302930	4	
20	531206714	10300020	2	11x4.00-4 (280X11) yellow
20	531206713	1030002E	2	11x4.00-4(280x11-0) grey
21	531206738	10300320	1	SX
22	531206736	10300283	1	
23	531206740	10300340	1	D.16,5x34x3,5
24	531206741	10300350	1	D.18x48x4 UNI6593 ZNT
25	531206739	10300330	2	M16 UNI 5588 ZNT
26	531206926	10302850	5	D.12
27	531208575	20330300	2	

brand	BERNARD LOISIRS

date	JAN/02	SHEET11/16

Model

BL 10567 10.5HP

9538782-09

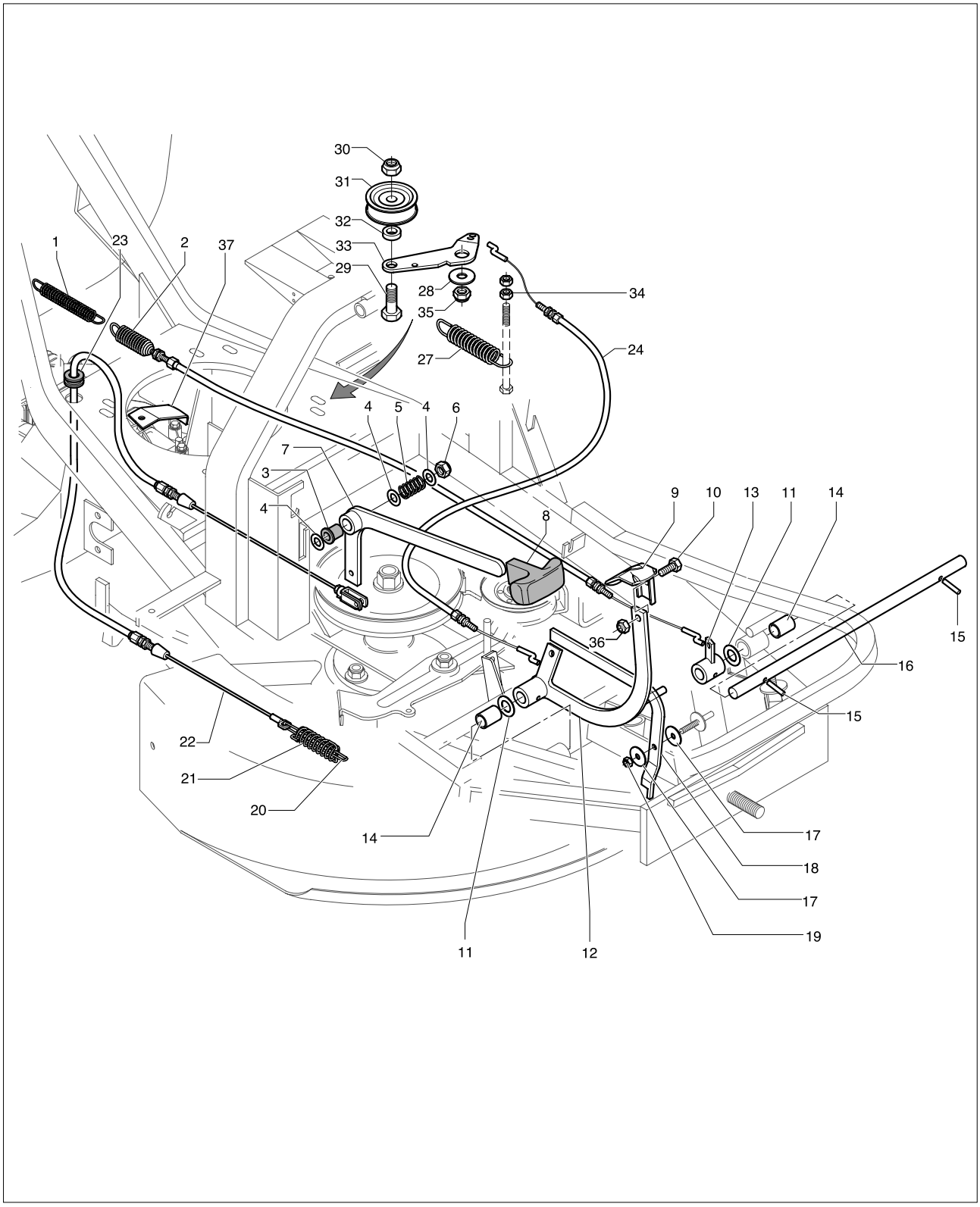

brand	BERNARD LOISIRS

date	JAN/02	SHEET12/16

BL 10567 10.5 HP

Pos	PN ELX	PN MEP	Q.ty	Note
1	531207029	10330360	1	
2	531206811	10301190	1	
3	531206801	10301060	1	
4	531206760	10300580	3	D.10.1x19x0.3 ITT
5	531206759	10300560	1	
7	531206758	10300550	1	
8	531207024	10330253	1	
9	531206773	10300743	1	
10	531208585	20382300	1	TE M8x20 UNI 5739-8.8-ZB
11	531206782	10300850	2	D.15,2x22x0,5 ITT
12	531207004	10330070	1	
13	531206777	10300780	1	
14	531206776	10300770	2	14x1
15	531206772	10300720	2	5x30 Din 7343 C70-C72
16	531206775	10300760	1	
17	531207860	10832200	2	6x24x2
18	531207005	10330082	1	
19	531208491	20281800	1	M6 H8 UNI7473-ZB
20	531206765	10300630	2	
21	531206779	10300820	1	D.20x61x3 ZNT TROP.
22	531206762	10300600	1	
23	531206763	10300610	1	
24	531207012	10330150	1	
27	531207017	10330180	1	
28	531207989	20113000	1	10x30x2,5
29	531206944	10303080	1	TE M12X35-8.8-UNI5739 ZB
30	531206835	10301560	1	M12 ALTO CL.6
31	531207019	10330200	1	
32	531207020	10330210	1	D.12X20X6HZB
33	531207018	10330190	1	
34	531207982	20106300	2	M8 H8 UNI 5587-6S ZB
35	531207161	10501160	2	M10 H12 UNI7473-ZB
36	531208599	20404900	1	M8 H10 UNI7473-ZB
37	531207032	10330390	1	

brand	BERNARD LOISIRS

date	JAN/02	SHEET13/16

Model

BL 10567 10.5HP

9538782-09

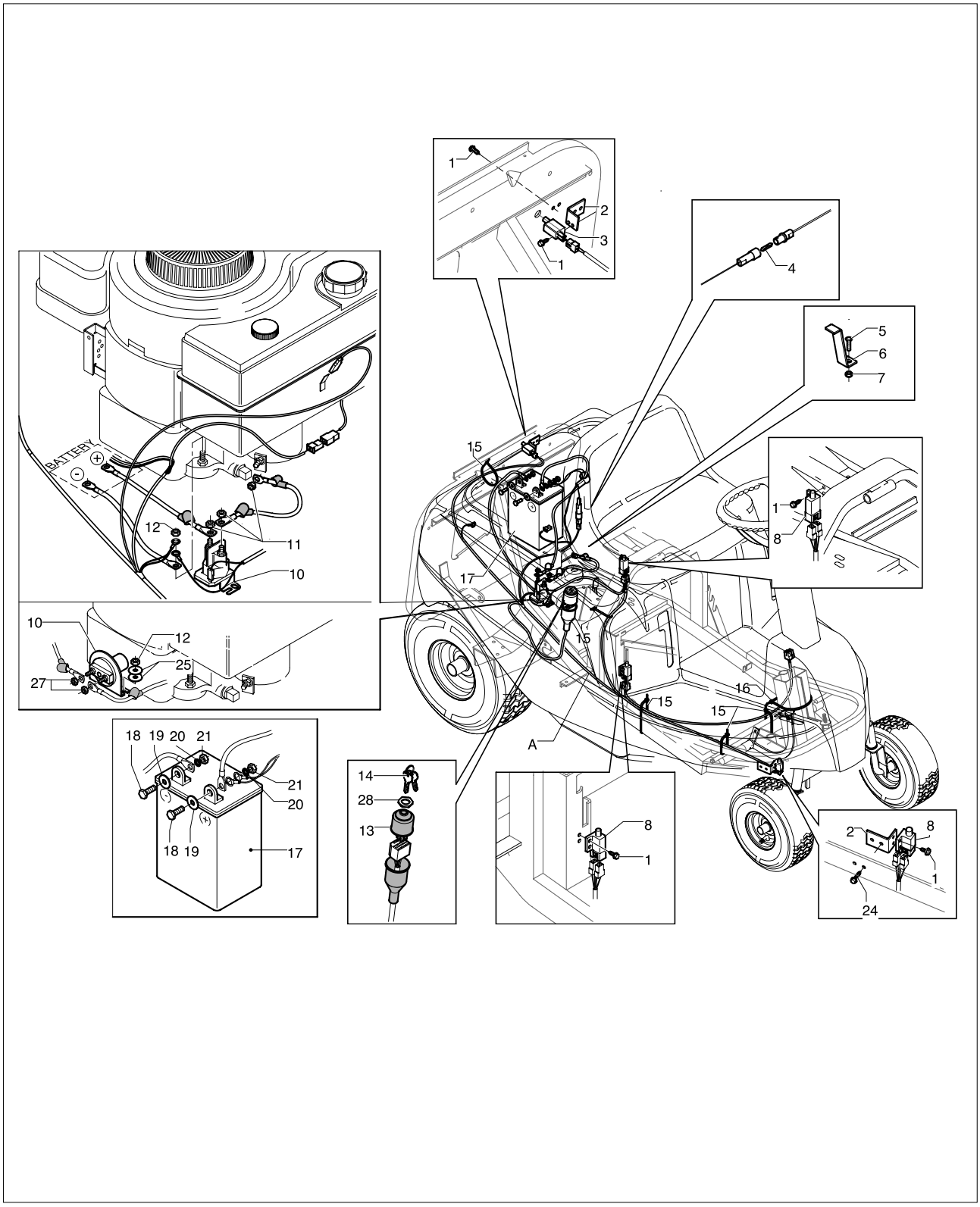

brand	BERNARD LOISIRS

date	JAN/02	SHEET14/16

BL 10567 10.5 HP

Pos	PN ELX	PN MEP	Q.ty	Note
A	531206865	10301990	1	
1	531206910	10302680	10	TE.FR. D.5.5x13 Z
2	531206871	10302050	2	
3	531206870	10302040	1	
4	531206932	10302960	1	16A
5	531206921	10302800	1	TPSE M8x20 - 10.9 UNI 5933
6	531206872	10302060	1	
7	531208599	20404900	1	M8 H10 UNI7473-ZB
8	531206868	10302020	3	
10	531206931	10302950	1	
11	531206752	10300480	3	1/4" UNC ZNT
12	531207982	20106300	1	M8 H8 UNI 5587-6S ZB
13	531206863	10301970	1	
14	531206864	10301980	2	
15	531206919	10302780	4	3,6x200
16	531206923	10302820	1	3,6x370
17	531206866	10302000	1	6IF130-12V-22AH
18	531208660	20501370	2	TE M6x20 UNI 5739-8,8-ZB
19	531205377	10126000	2	6x18x1,5
20	531206731	10300230	2	D.6 DIN128 TIPO B ZNT
21	531207165	10501200	2	M6 H6 UNI 5587-6S-ZB
24	531207028	10330320	2	TE FR D.55X16 UNI
25	531204904	10066300	2	8x24x2
27	531207165	10501200	2	M6 H6 UNI 5587-6S-ZB
28	531206893	10302620	1	DSI P/N 9256

brand	BERNARD LOISIRS

date	JAN/02	SHEET15/16

Model

BL 10567 10.5HP

9538782-09

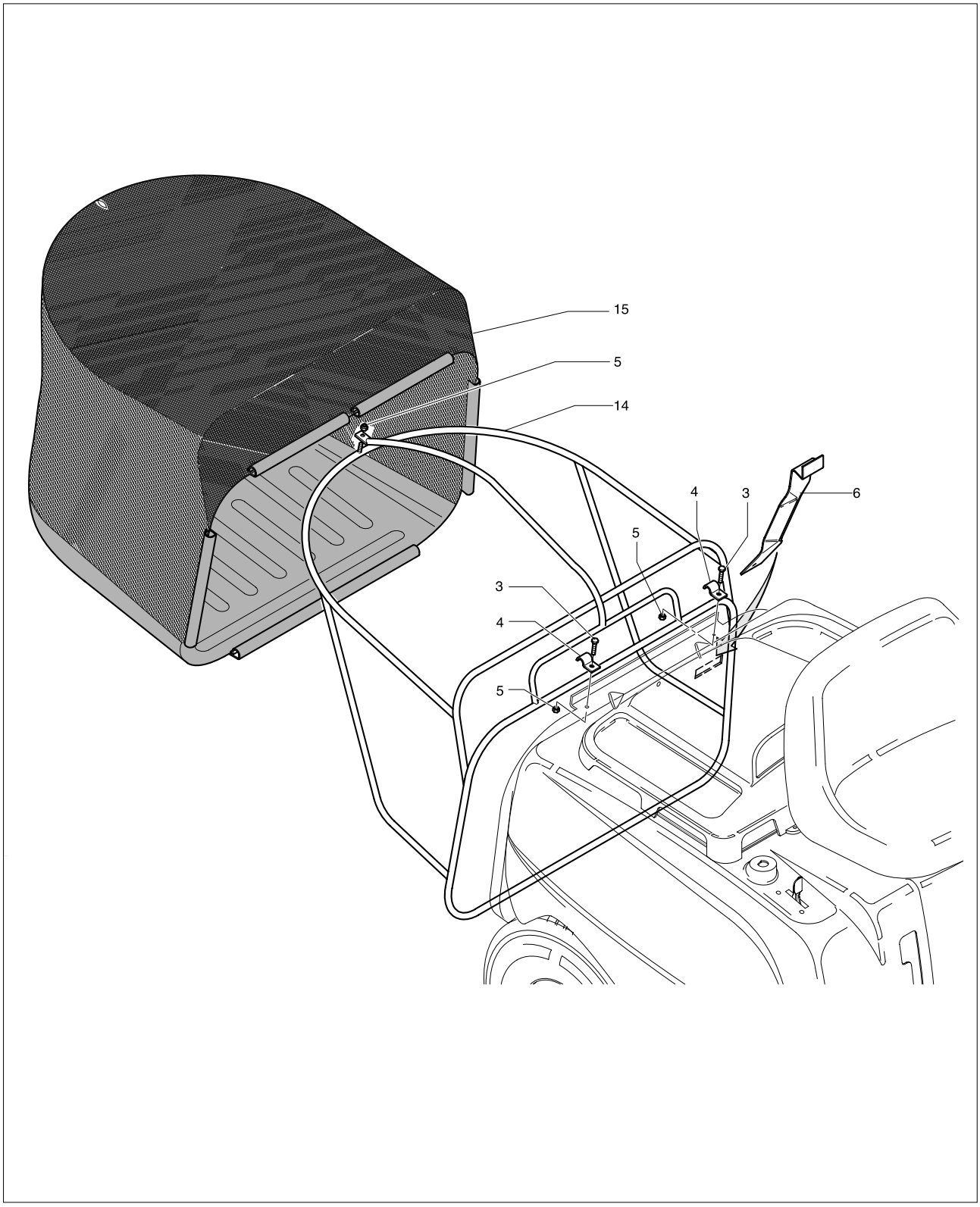

BERNARD Loisirs

brand	BERNARD LOISIRS

date	JAN/02	SHEET16/16

BL 10567 10.5 HP

Pos	PN ELX	PN MEP	Q.ty	Note
3	531208769	20655100	2	TE M6x16 UNI 5739-8,8-ZB
4	531206852	10301800	2	
5	531208491	20281800	3	M6 H8
6	531206788	10300920	1	
14	531207008	10330113	1	
15	531207009	10330123	1	