FIG. 8 METAL AND BLADE SYSTEM

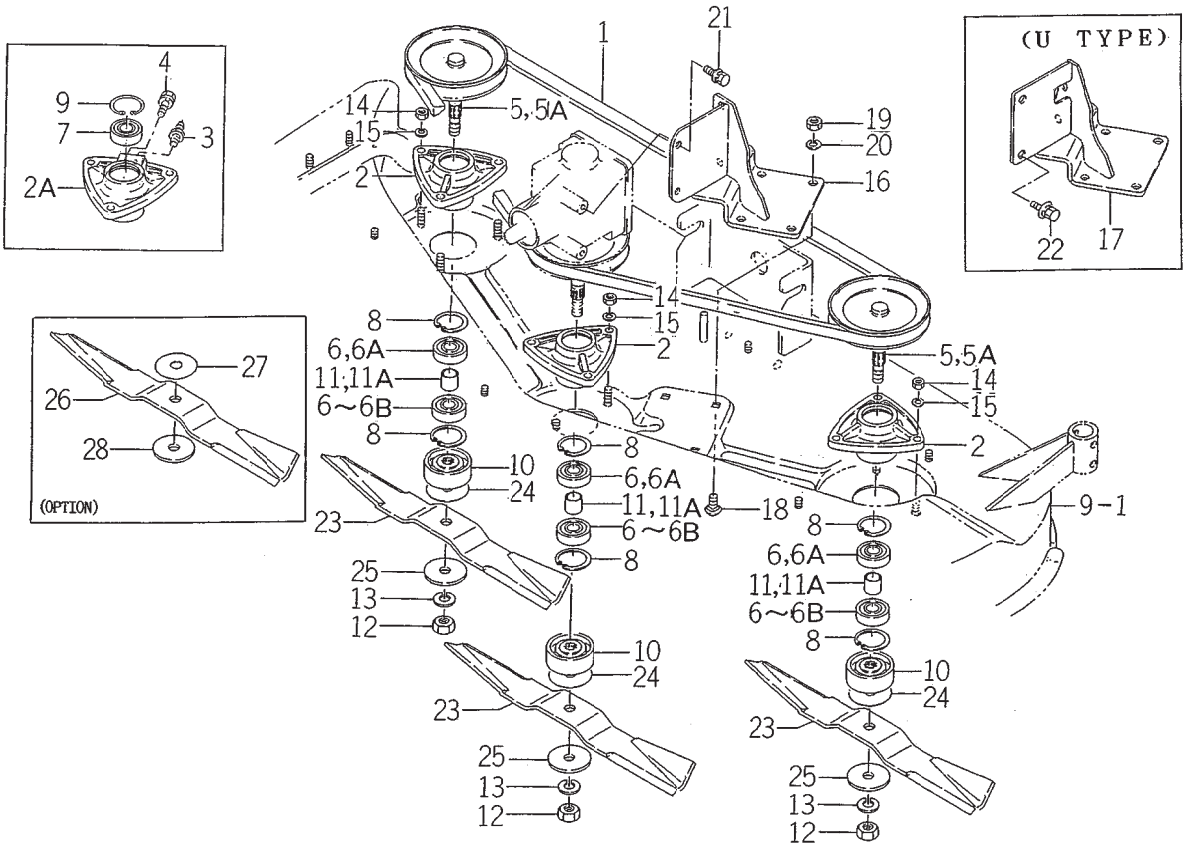

8595-301

KEY	PART CODE	DESCRIPTION	QTY	TYPE OF MODEL SSM48		ITC	COL	GRP	REMARKS
21	V211 - 360 - 802 - 00	BOLT,SP/M8X20	2	*					
22	V211 - 360 - 802 - 00	BOLT,SP/M8X20	4	*					
23	8595 - 306 - 061 - 00	BLADE/50X426	3	*					
24	8595 - 305 - 011 - 00	SHIM/1.2	1	*					
25	8595 - 305 - 012 - 00	WASHER/14X55X05	3	*					
26	8597 - 306 - 001 - 00	BLADE/50X429	3	T					
27	8595 - 305 - 011 - 00	SHIM/1.2	1	T					
28	8595 - 305 - 012 - 00	WASHER/14X55X05	3	T					