ILLUSTRATED PARTS BREAKDOWN

BERNARD
12.5 HP 36" LAWN TRACTOR
MODEL NO. BL125T36 (BLT12536A)
PRODUCT NO. 954 56 68-36

176158 01.03.01 RH
PRINTED IN U.S.A.

REPAIR PARTS

TRACTOR - - MODEL NO. BL125T36 (BLT12536A), PRODUCT NO. 954 56 68-36

ELECTRICAL

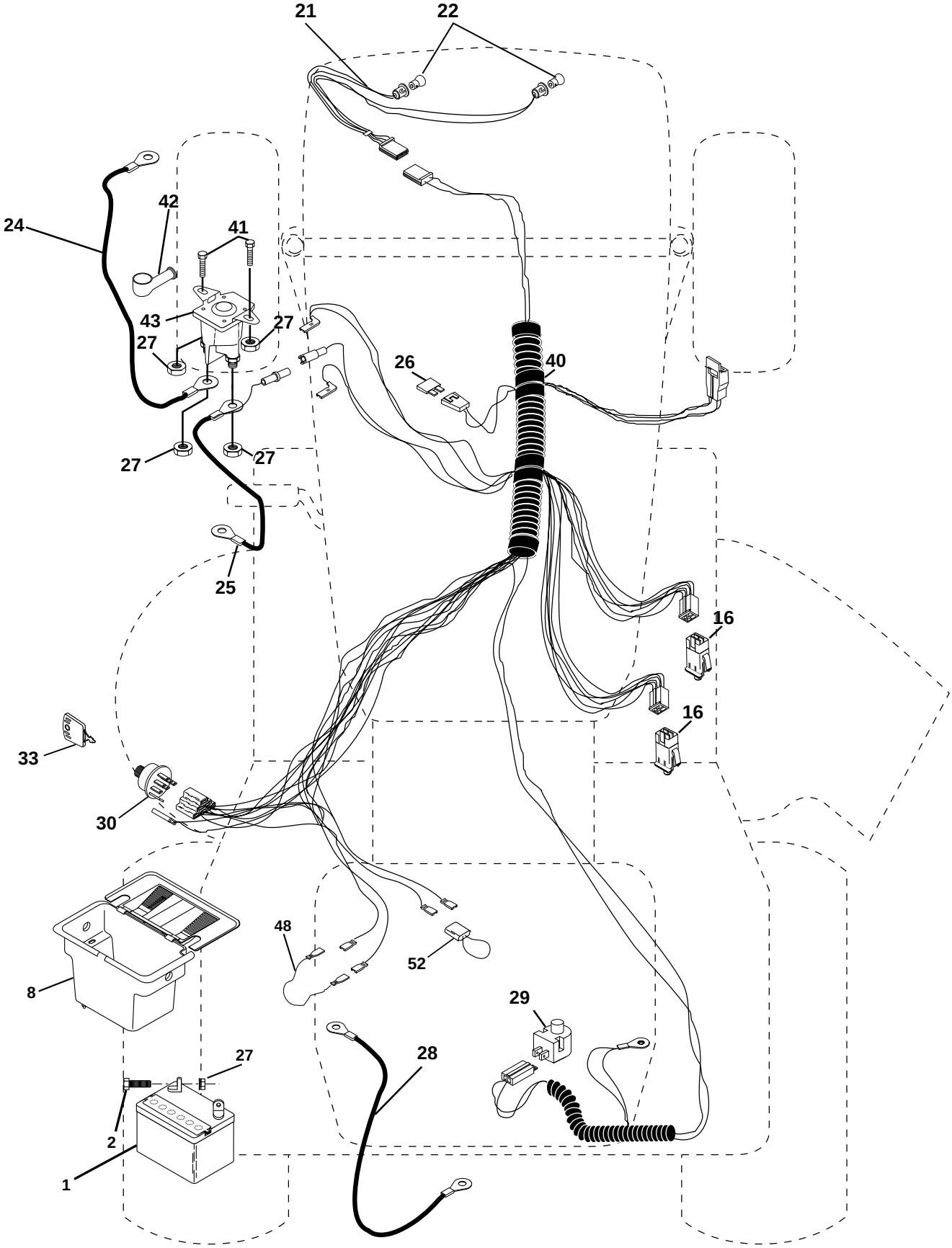

REPAIR PARTS

TRACTOR - - MODEL NO. BL125T36 (BLT12536A), PRODUCT NO. 954 56 68-36

ELECTRICAL

KEY NO.	PART NO.	DESCRIPTION
1	144925	Battery 12 Volt 25 AMP
2	74760412	Bolt Hex Hd 1/4-20unc X 3/4
8	156417	Case Battery
16	153664	Switch Interlock Push-In
21	166181	Harness Asm Light W/4152j
22	4152J	Bulb Light #1156
24	108423X	Cable Battery
25	146147	Cable Battery 6 Ga 44" red
26	175158	Fuse 20 AMP
27	73510400	Nut Keps Hex 1/4-20 Unc
28	4207J	Cable Ground 6 Ga 12" black
29	121305X	Switch Plunger Nc Gray
30	175566	Switch Ign
33	140401	Key Ign
40	170217	Harness Ignition
41	71110408	Bolt Blk Fin Hex 1/4 - 20 x 1/2
42	131563	Cover Terminal Red
43	175141	Solenoid
48	140844	Adapter Ammeter
52	141940	Protection Wire Loop

NOTE: All component dimensions give in U.S. inches
1 inch = 25.4 mm.

REPAIR PARTS

TRACTOR - - MODEL NO. BL125T36 (BLT12536A), PRODUCT NO. 954 56 68-36

CHASSIS AND ENCLOSURES

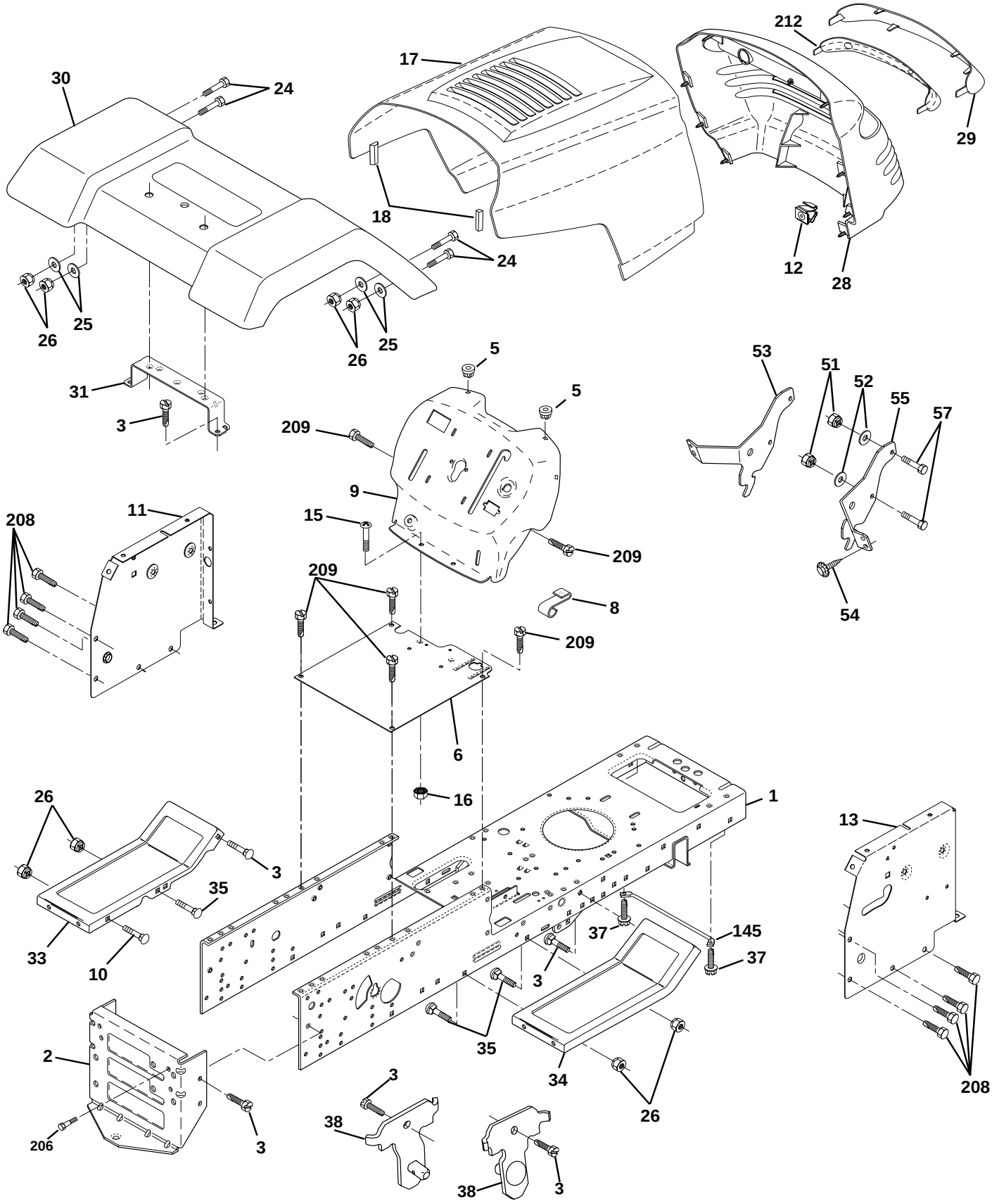

REPAIR PARTS

TRACTOR - - MODEL NO. BL125T36 (BLT12536A), PRODUCT NO. 954 56 68-36

CHASSIS AND ENCLOSURES

KEY NO.	PART NO.	DESCRIPTION
1	169831	Chassis
2	169061	Drawbar
3	17060612	Screw, 3/8-16 x 3/4 SMGML Tap/R
5	155272	Bumper Hood/Dash
6	155924X012	Saddle Flat
8	155138	Clip Retainer Slide-On
9	168347X011	Dash P/L
10	72140608	Bolt, Rdhd Sqnk 3/8-16 x 1
11	155927	Panel Asm.Dash LH
12	145660	Clip Tinnerman Grille P/L
13	172107X010	Dash, Panel RH
15	74180512	Screw Mach.Trhd 5/16-18 UNC x 3/4
16	73510500	Nut Keps 5/16-18 UNC
17	159639X421	Hood Pnt Stl PL
18	126938X	Bumper Hood
24	74780616	Bolt, Hex , Fin. 3/8-16UNC x 1 Gr. 5
25	19131312	Washer 13/32 x 13/16 x12 Gauge
26	73800600	Nut Lock Hex w/Ins. 3/8-16 Unc
28	170473X428	Grille
29	170472X599	Lens Grille
30	169465X421	Fender Pnt
31	136619	Bracket Fender
33	105476X418	Footrest Pnt., LH
34	105475X418	Footrest Pnt., RH
35	72110606	Bolt Rdhd Sht. Sqnk 3/8-16 X 3/4
37	17490508	Screw Thdrol 5/16-18 x 1/2 Tyt
38	169834	Bracket Asm Pivot Mower Rear
51	73800400	Nut Lock Hex W/Ins 1/4-20
52	19091416	Washer 9/32 x 7/8 x 16 Ga.
53	144697	Bracket, Grille LH
54	161464	Screw Hex WSHD 8-18 x 7/8
55	144696	Bracket Grille RH
57	74780412	Bolt Fin Hex 1/4-20 x 3/4
145	156524	Rod Pivot Chassis/Hood
206	170165	Bolt Shoulder 5/16-18
208	17670608	Screw Thdrol 3/8-16 x 1/2
209	17000612	Screw Hexwsh Thdr 3/8-16 x 3/4
212	174503	Lens Insert
- -	5479J	Plug Btn Blk .359 Dia Ch/Inf

NOTE: All component dimensions given in U.S. inches
1 inch = 25.4 mm

REPAIR PARTS

TRACTOR - - MODEL NO. BL125T36 (BLT12536A), PRODUCT NO. 954 56 68-36

DRIVE

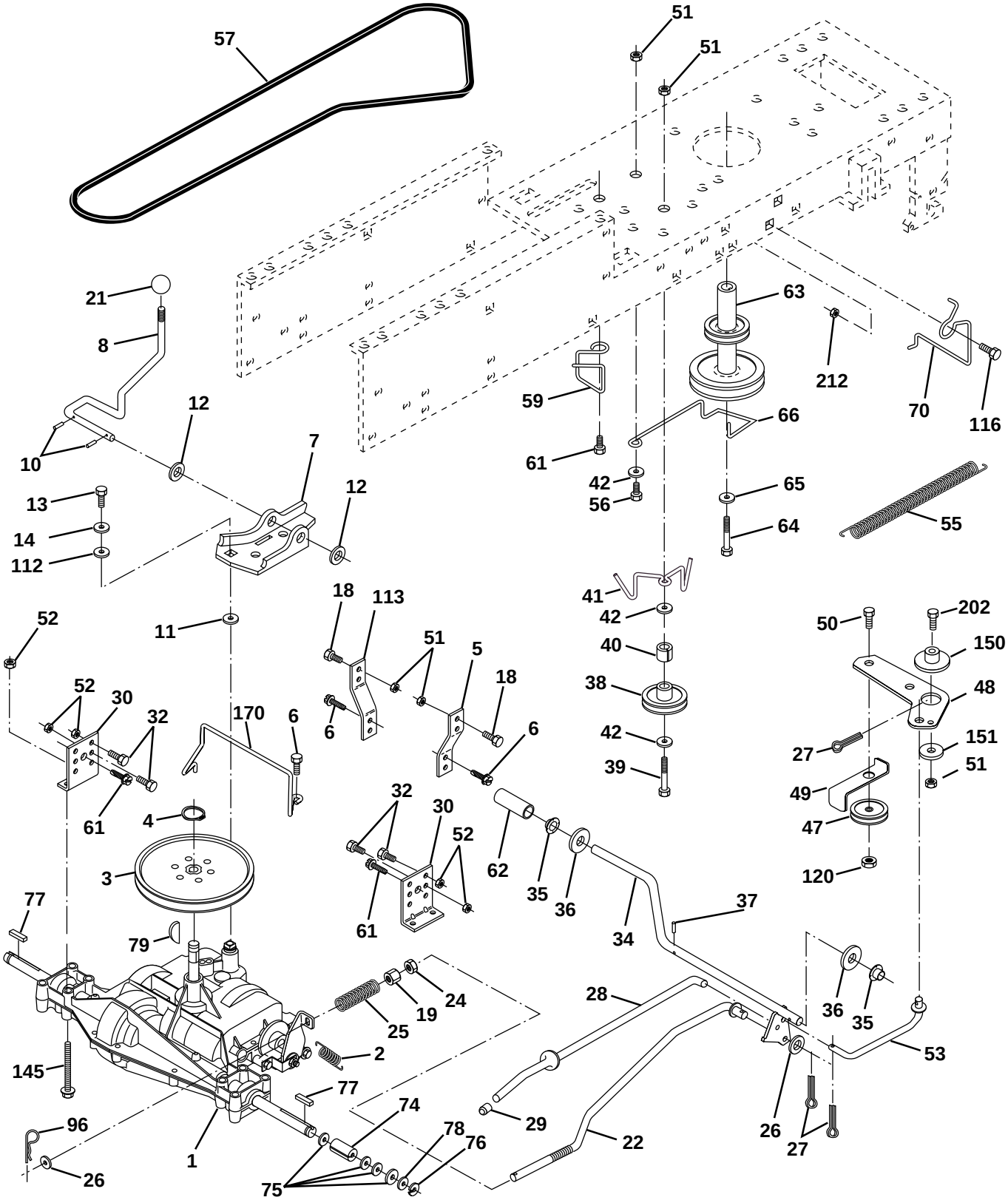

REPAIR PARTS

TRACTOR - - MODEL NO. BL125T36 (BLT12536A), PRODUCT NO. 954 56 68-36

DRIVE

KEY NO.	PART NO.	DESCRIPTION
1	- - - - - - -	Transaxle (See Breakdown) Peerless, Model 206-545C (Order parts from transaxle manufacturer)
2	146682	Spring, Brake Return
3	123666X	Pulley, Transaxle
4	12000028	Ring, Retainer
5	121520X	Strap, Torque
6	17060512	Screw, 5/16-18 x 3/4 SMGML
7	162240	Bracket, T/A, Saddle Shift
8	131679	Rod, Shifter
10	76020416	Pin, Cotter 1/8 x 1
11	105701X	Washer, Shift Plate
12	19151216	Washer 15/32 x 3/4 x 16
13	74550412	Bolt 1/4-28 UNF Gr. 8 w/Patch
14	10040400	Washer Lock
18	74780616	Bolt, Fin Hex 3/8-16 Unc x 1 Gr.
19	73800600	Locknut 3/8-16
21	106933X	Knob
22	130804	Rod, Brake
24	73350600	Nut, Hex Jam 3/8-16
25	106888X	Spring, Rod, Brake
26	19131316	Washer 13/32 x 13/16 x 16 Gauge
27	76020412	Pin, Cotter 1/8 x 3/4
28	145204	Rod, Brake, Park
29	71673	Cap, Plunger
30	174973	Bracket, Transaxle
32	74760512	Bolt Hex Hd 5/16-18 UNC x 3/4
34	155071	Shaft, Foot Pedal
35	120183X	Bearing Nylon
36	19211616	Washer 21/32 x 1 x 16 Gauge
37	1572H	Pin,Roll 3/16 x 1
38	131494	Idler, Flat
39	74760644	Bolt Fin Hex 3/8-16 x 2-3/4
40	4470J	Spacer
41	165838	Keeper, Belt
42	19131312	Washer 13/32 x 13/16 x 12 Gauge
47	127783	Pulley, Idler
48	154407	Bellcrank Asm Clutch
49	123205X	Retainer, Belt
50	74760624	Bolt, Hex 3/8-16 x 1-1/2
51	73680600	Nut, Crownlock 3/8-16
52	73680500	Nut, Crownlock 5/16-18
53	105710X	Link, Clutch
55	105709X	Spring, Return, Clutch
56	74760620	Bolt, Fin, Hex 3/8-16unc x 1-1/2
57	130801	V-Belt, Drive
59	169691	Keeper Belt Center Span
61	17060612	Screw, 3/8-16 x 3/4 SMGML
62	8883R	Cover, Foot Pedal
63	140186	Pulley, Engine
64	71170764	Bolt, Hex 7/16-20 x 4 Gr. 5
65	10040700	Washer, Lock Hvy Hlcl Spr 7/16
66	154778	Keeper, Belt Engine F-Proof
70	134683	Guide Belt Mower Drive RH
72	19132012	Washer 13/32 x 1-1/4 x 12 Ga.
74	137057	Spacer, Split
75	121749X	Washer 25/32 x 1-1/4 x 16 Ga.
76	12000001	E-Ring
77	123583X	Key Square
78	121748X	Washer 25/32 x 1-5/8 x 16 Ga.
79	2228M	Key Woodruff #9 3/16 x 3/4
96	4497H	Retainer Spring 1" Ziinc/Cad
112	19091210	Washer 9/32 x 3/4 x 10 Ga.
113	127285X	Strap Torque L.H. Lt
116	72110610	Bolt, RdHd Sq Neck 3/8-16 x 1.25
145	74490540	Bolt, Hex Flghd 5/16-18 Gr. 5
150	165850	Bushing, Bellcrank Grd Dr.
151	19133210	Washer 13/32 x 2 x 10 Ga.
170	173898	Keeper, Belt TA PMST/DANA
202	72110612	Bolt Carr Sh 3/8-16 x 1-1/2 Gr. 5
204	17060512	Screw 5/16-18 x 3/4 SMGML Tap/R

NOTE: All component dimensions give in U.S. inches. 1 inch = 25.4 mm.

REPAIR PARTS

TRACTOR - - MODEL NO. BL125T36 (BLT12536A), PRODUCT NO. 954 56 68-36

SEAT

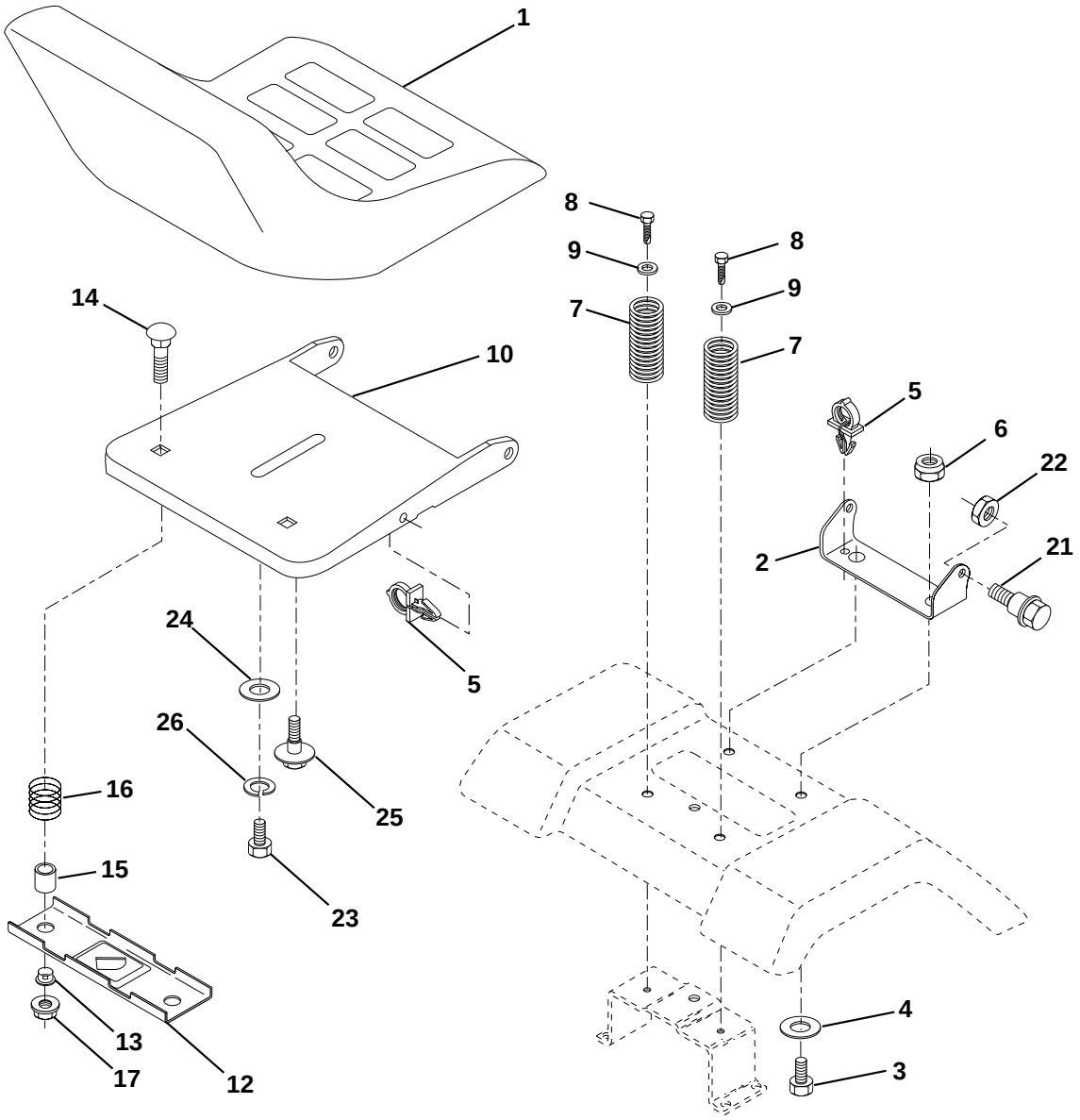

KEY NO.	PART NO.	DESCRIPTION
1	127426X	Seat
2	140551	Bracket, Pivot, Seat
3	71110616	Fin Hex 3/8-16unc x 1
4	19131610	Washer 13/32 x 1 x 10 Ga.
5	145006	Clip, Push-in
6	73800600	Nut
7	124181X	Spring, Seat
8	17000616	Screw, 3/8-16 x 1.5 SMGML Tap/R
9	19131614	Washer 13/32 x 1 x 14 Ga.
10	174894	Pan, Seat
12	121246X	Bracket, Mounting, Switch, Seat
13	121248X	Bushing, Nylon

KEY NO.	PART NO.	DESCRIPTION
14	72050412	Nut, Crownlock 1/4-20 x 1-3/8
15	134300	Spacer, Split
16	121250X	Spring
17	123976X	Nut, Lock, Flange 1/4 Gr. 5
21	171852	Bolt, Shoulder 5/16-18 UNC-2A
22	73800500	Nut
23	71110814	Bolt Hex
24	19171912	Washer 17/32 x 1-3/16 x 12 Ga.
25	127018X	Bolt Shoulder 5/16-18 x .62
26	10040800	Washer Lock Hvy Hclc Spr 1/2

NOTE: All component dimensions given in U.S. inches
1 inch = 25.4 mm

REPAIR PARTS

TRACTOR - - MODEL NO. BL125T36 (BLT12536A), PRODUCT NO. 954 56 68-36

DECALS

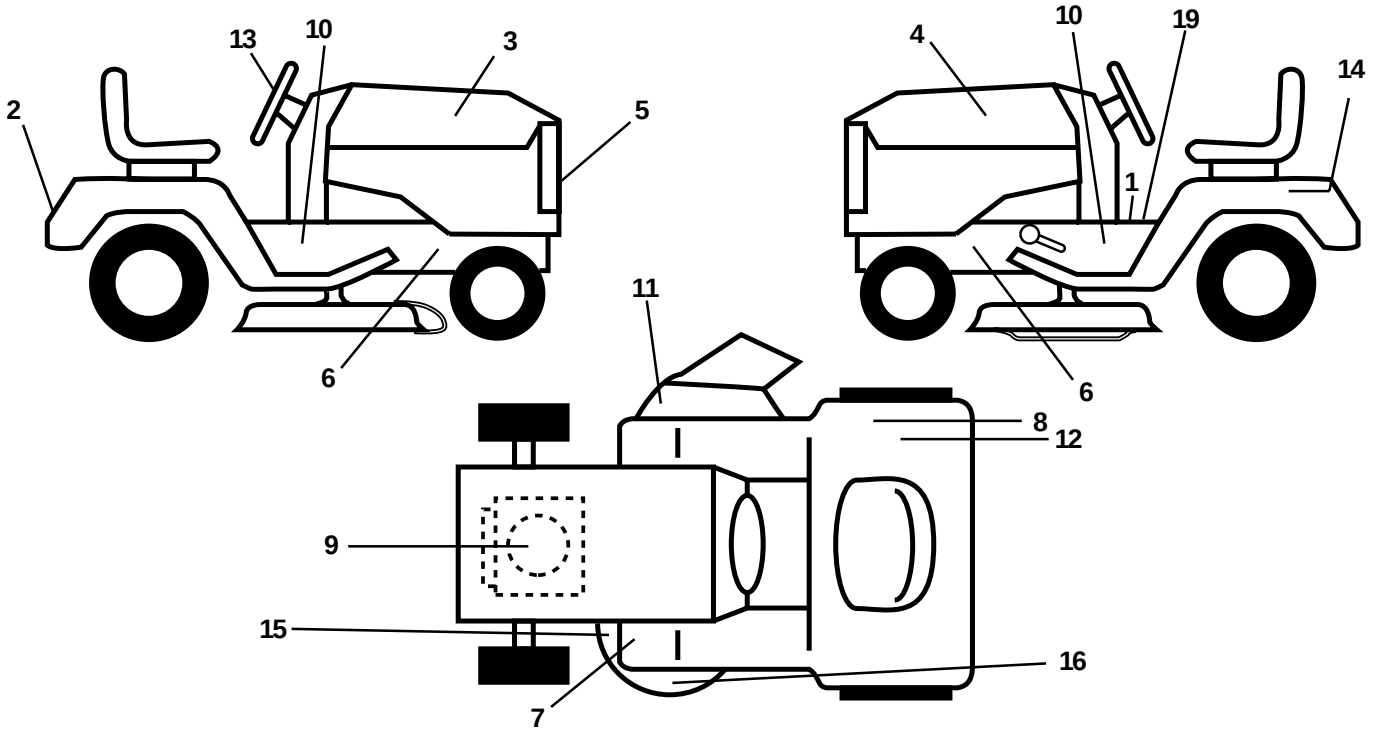

KEY NO.	PART NO.	DESCRIPTION
1	145498	Decal, Instruction, Operation
2	166708	Decal, Fender
3	176000	Decal, Hood RH
4	176001	Decal, Hood LH
5	166287	Decal, Lens
6	159736	Decal, Chassis Hot Muffler
7	159737	Decal, Brake/Clutch Symbol LT
8	145437	Decal, Europe Stand CE
9	64-1725-29	Decal, HP Engine
10	157648	Decal, Chassis
11	145494	Decal, Mower Cutfinger Symbol
12	126187X	Decal 100 DBA
13	166285	Decal, Wheel Steering
14	145005	Decal, Btry Dngr/Psn P/L Sym
15	136832	Decal, V-Belt
16	134999	Decal, Deck
19	140837	Decal, Parking Brake
- -	138311	Decal, Handle, Lift, Height Adjust (Lift Handle)
- -	162598	Decal, Drawbar Load Limit
- -	176157	Manual, (Euro) Operator's
- -	176158	Manual, Repair Parts

TIRES AND WHEELS

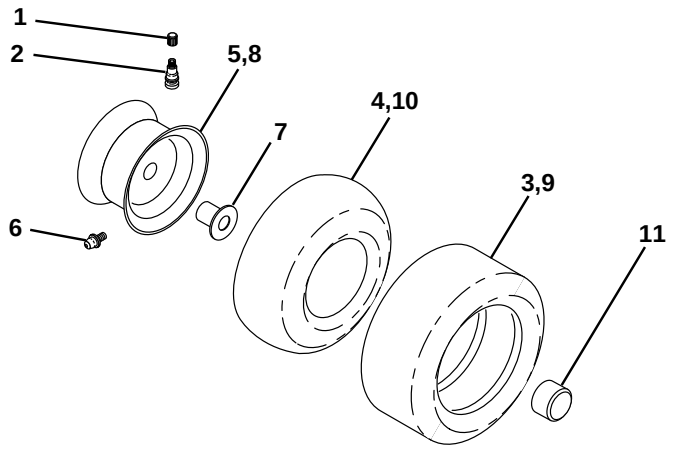

KEY NO.	PART NO.	DESCRIPTION
1	59192	Cap, Valve
2	65139	Stem, Valve
3	106222X	Tire Front
4	59904	Tube, Front (not furnished)
5	106732X421	Rim, Asm. Front
6	278H	Grease Fitting (rear tire only)
7	9040H	Bearing, Flange (front tire only)
8	106108X421	Rim, Asm. Rear
9	124635X	Tire, Rear
10	7152J	Tube, Rear (not furnished)
11	104757X428	Cap, Axle
- -	144334	Sealant, Tire (10 oz. Tube)

NOTE: All component dimensions given in U.S. inches
1 inch = 25.4 mm

REPAIR PARTS

TRACTOR - - MODEL NO. BL125T36 (BLT12536A), PRODUCT NO. 954 56 68-36

STEERING WHEEL

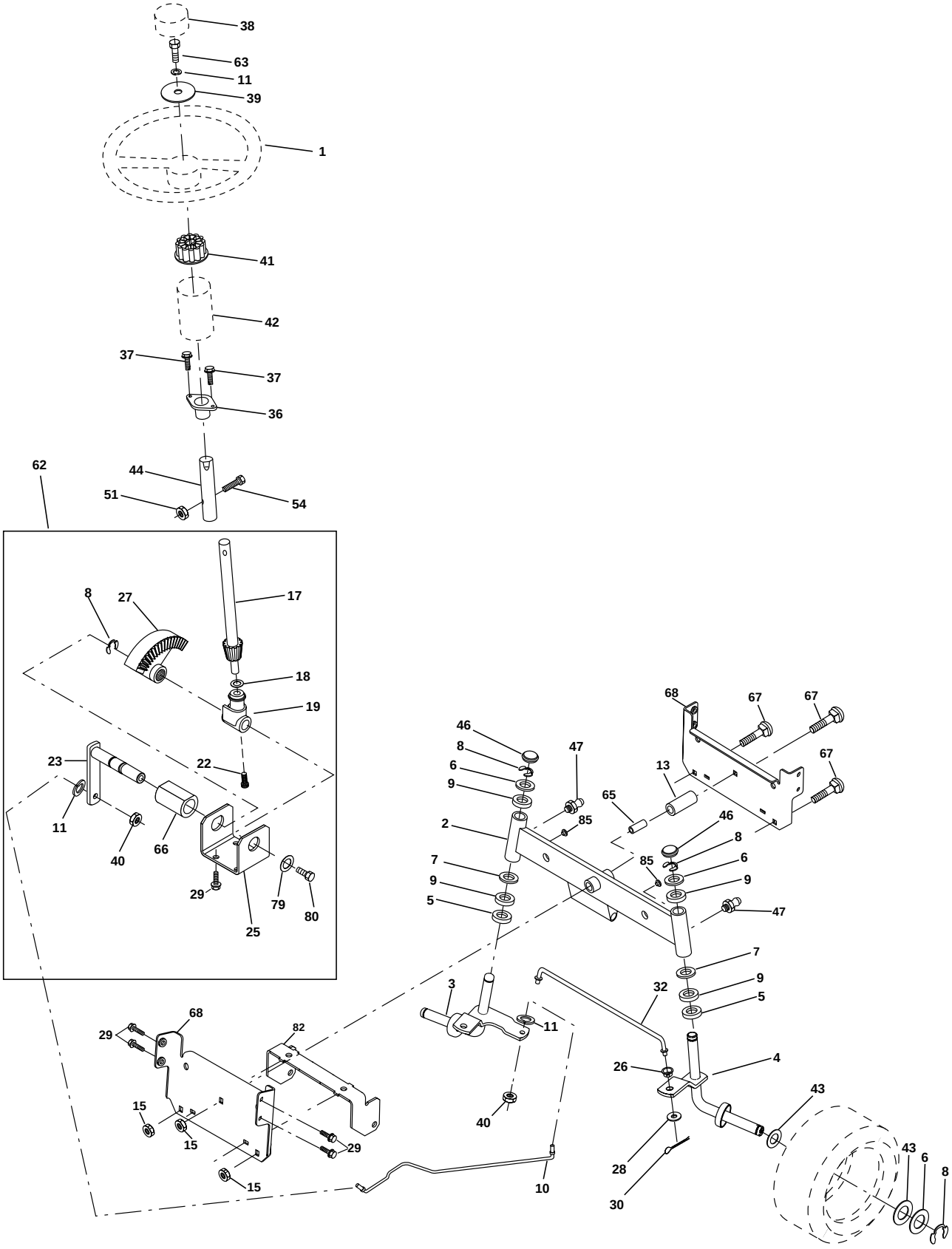

REPAIR PARTS

TRACTOR - - MODEL NO. BL125T36 (BLT12536A), PRODUCT NO. 954 56 68-36

STEERING WHEEL

KEY NO.	PART NO.	DESCRIPTION
1	139768	Wheel Steering
2	154427	Axle Asm Front
3	169840	Spindle Asm LH
4	169839	Spindle Asm RH
5	6266H	Bearing, Race, Thrust Hardened
6	121748X	Washer 25/32 X 1-5/8 X 16 Ga
7	19272016	Washer 27/32 X 1-1/4 X 16 Ga
8	12000029	Ring Klip
9	3366R	Bearing
10	169832	Link Drag
11	10040600	Washer Lock Hvy Hlcl Spr 3/8
13	163518	Spacer Brg. Axle Front
15	145212	Nut Hexflange Lock
17	156546	Steering, Assembly Shaft
18	57079	Washer Thrust 515x 750x 033
19	160395	Support Shaft
22	165857	Screw Hex WSHHD Torx
23	165851	Shaft Asm Pittman
25	154406	Bracket Steering
26	126847X	Bushing Link Drag Blk Lr
27	136874	Gear Sector
28	19131416	Washer 13/32 x 7/8 x 16 Ga.
29	17060612	Screw 3/8-16x3/4 SMGML Tap/R
30	76020412	Pin Cotter 1/8 x 3/4 CAD
32	130465	Rod Connecting
36	155099	Bushing Steering
37	152927	Screw TT #10-32 X 5 x 3/8 Flange
38	140175	Cap Wheel Steering
39	19133812	Washer 13/32 x 2-3/8 x 12 Ga
40	7810H	Nut Lock Center 3/8-24 Unf
41	100711L	Adapter Wheel Strg
42	145054X428	Boot Steering
43	121749X	Washer 25/32 X 1 1/4 X 16 Ga
44	153720	Extension Steering
46	121232X	Cap Spindle
47	6855M	Fitting Grease
51	73800500	Nut Lock Hex W/Ins. 5/16-18 Unc P
54	74780520	Bolt Fin Hex 5/16-18 Unc 6 x 1-1/4
62	167902	Kit Steering Asm. Service
63	74780616	Bolt Fin Hex 3/8-16unc x 1 Gr. 5
65	160367	Spacer Brace Axle
66	154404	Bearing Arm Pittman
67	72140618	Bolt RDHD SQ 3/8-16UNC x 2-1/4
68	169827	Brace Axle
79	19132012	Washer 13/32 x 1-1/4 x 12
80	74950612	Bolt, Hex Nylon 3/8-16 x 3/4
82	169835	Bracket Susp. Chassis Front
85	133835	Fastener Christmas Tree

NOTE: All component dimensions given in U.S. inches
1 inch = 25.4 mm

REPAIR PARTS

TRACTOR - - MODEL NO. BL125T36 (BLT12536A), PRODUCT NO. 954 56 68-36

ENGINE

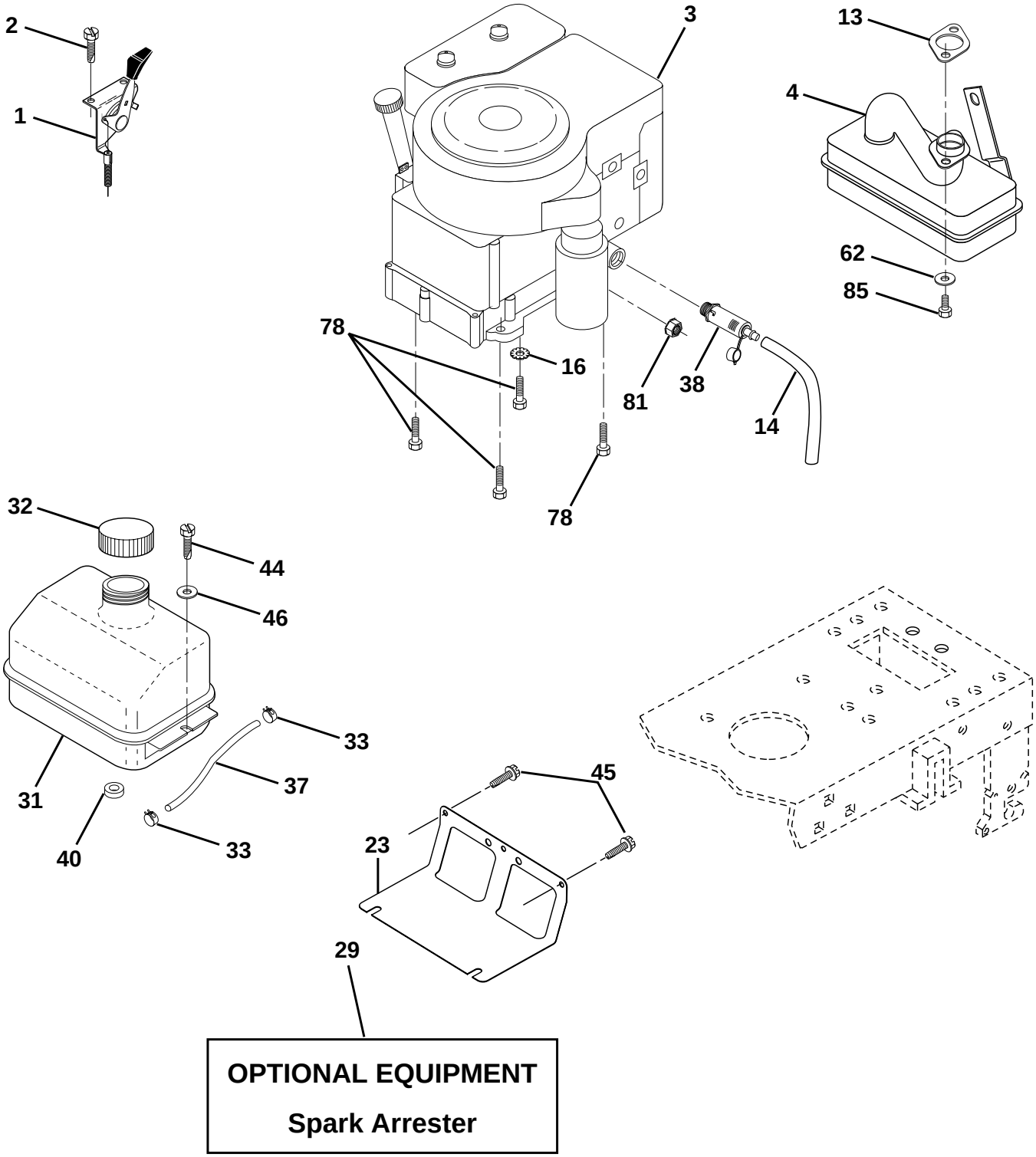

REPAIR PARTS

TRACTOR - - MODEL NO. BL125T36 (BLT12536A), PRODUCT NO. 954 56 68-36

ENGINE

KEY NO.	PART NO.	DESCRIPTION
1	170865	Control Th/ch
2	17720410	Screw Hex Thd Cut 1/4-20x5/8 T
3	- - - - - -	Engine, Tecumseh Model OHV135
		Order parts from engine manufacturer
4	156700	Muffler
13	165291	Gasket
14	148456	Tube Drain Oil Easy
16	11050600	Washer Lock Ext Tooth 3/8
23	169837	Shield BRN/DBR Guard
29	137180	Kit Spark Arrestor (Flat Scrn)
31	109202X	Tank Fuel Front
32	140527	Cap Asm Fuel
33	123487X	Clamp Hose Blk
37	137040	Line Fuel
38	148315	Plug Drain Oil Easy
40	124028X	Bushing Snap Nyl Blk Fuel Line
44	17670412	Screw Hexwsh Thdrol 1/4-20x3/4
45	17000612	Screw Hex Wsh Thdrol 3/8-16
46	19091416	Washer 9/32 X 7/8 X 16 Ga
62	10040500	Washer 5/16
78	17060620	Screw 3/8-16x1-1/4 SMGML Tap/R
81	73510400	Nut Keps Hex 1/4-20 UNC
85	123528X	Bolt, Hex Hd Phillips

NOTE: All component dimensions given in U.S. inches.
1 inch = 25.4 mm.

REPAIR PARTS

TRACTOR - - MODEL NO. BL125T36 (BLT12536A), PRODUCT NO. 954 56 68-36

MOWER LIFT

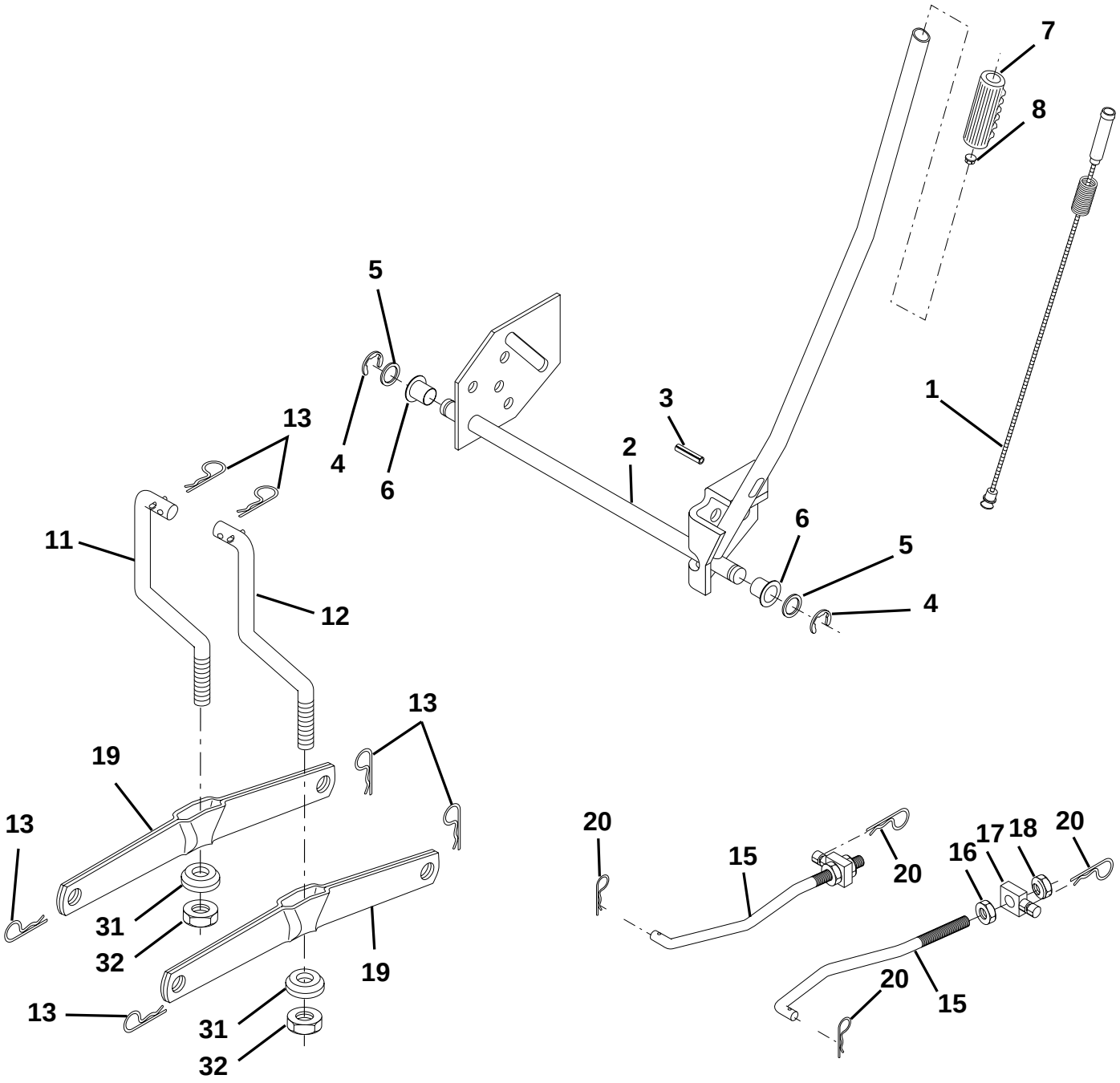

REPAIR PARTS

TRACTOR - - MODEL NO. BL125T36 (BLT12536A), PRODUCT NO. 954 56 68-36

MOWER LIFT

KEY NO.	PART NO.	DESCRIPTION
1	159460	Wire Asm. Inner/Sprg w/Plunger
2	159471	Shaft, Asm., Lift R/H
3	105767X	Pin, Groove
4	12000002	Ring, E #5133-62
5	19211621	Washer 21/32 x 1 x 21 Ga.
6	120183X	Bearing, Nylon
7	109413X	Grip Handle Bicycle Matte Blk
8	124526X	Button, Plunger
11	139865	Link, Lift, Lh
12	139866	Link, Lift, Rh
13	4939M	Spring, Retainer
15	173288	Link, Front
16	73350800	Nut, Jam, Hex 1/2-13 Unc
17	130171	Trunnion
18	73680800	Nut, Crownlock 1/2-13 Unc
19	139868	Arm, Suspension, Rear
20	163552	Spring, Retainer Zinc
31	169865	Bearing, Pvt Lft
32	73540600	Nut Crownlock 3/8-24

NOTE: All component dimensions given in U.S. inches
1 inch = 25.4 mm

REPAIR PARTS

TRACTOR - - MODEL NO. BL125T36 (BLT12536A), PRODUCT NO. 954 56 68-36

MOWER DECK

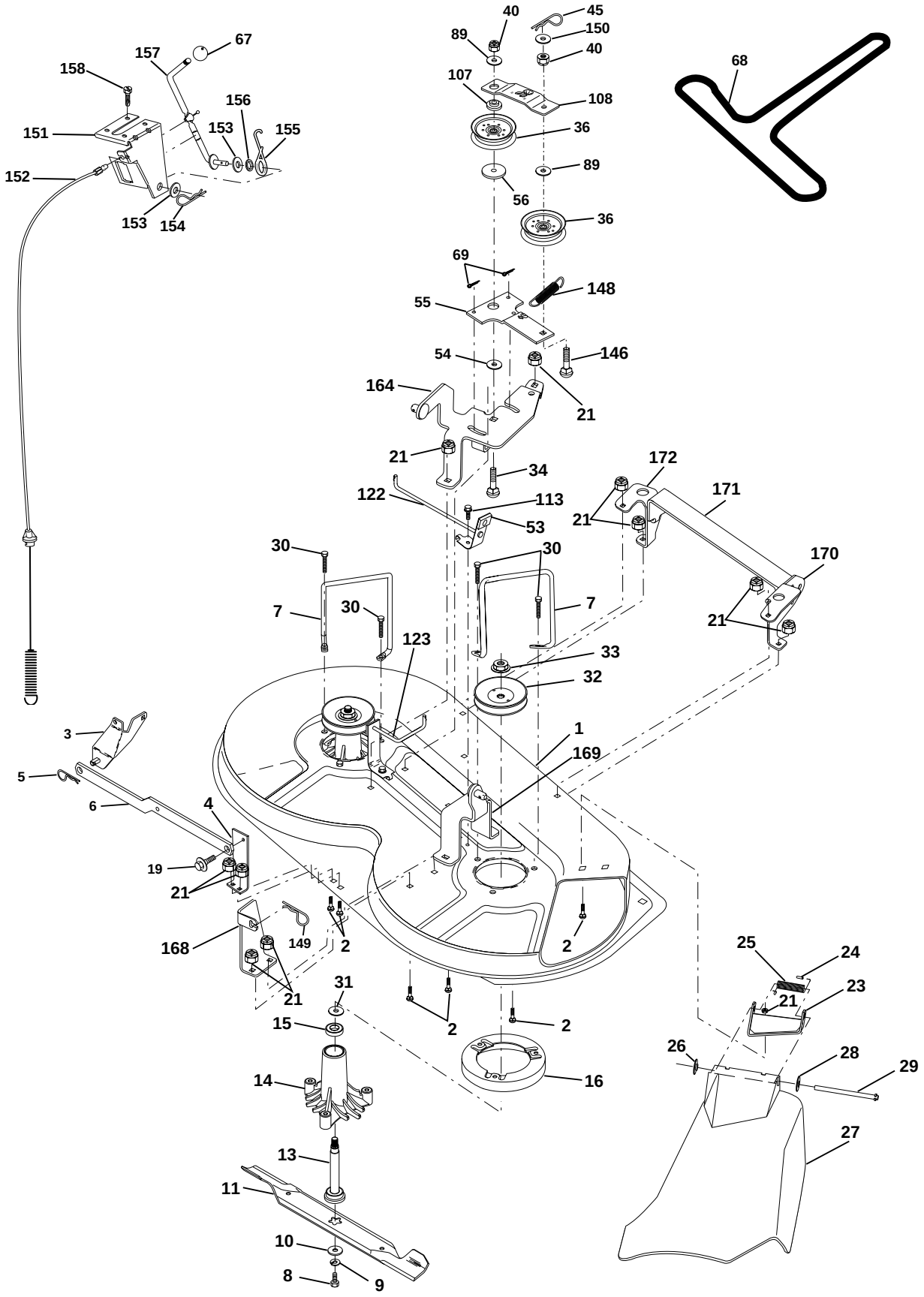

REPAIR PARTS

TRACTOR - - MODEL NO. BL125T36 (BLT12536A), PRODUCT NO. 954 56 68-36

MOWER DECK

KEY NO.	PART NO.	DESCRIPTION
1	174595	Mower Deck Assembly
2	72140506	Bolt
3	138017	Bracket Assembly,Sway Bar
4	175654	Bracket Sway Bar
5	4939M	Retainer Spring
6	130832	Arm, Suspension, Rear
7	140608	Keeper Belt
8	850857	Bolt, Hex 3/8-24 x 1.25 Gr. 8
9	10030600	Washer, Lock Hvy Hlcl 3/8
10	140296	Washer, Hardened
11	138496	Blade, Mower
13	137645	Shaft Assembly, Mandrel, Vented
14	128774	Housing, Mandrel, Vented
15	110485X	Bearing, Ball, Mandrel
16	140329	Stripper, Vented Mower Deck
19	132827	Bolt, Shoulder
21	73680500	Nut Crownlock 5/16-18
23	136631	Bracket, Mower Deflector
24	105304X	Cap, Sleeve
25	123713X	Spring, Torsion, Deflector
26	110452X	Nut, Push
27	175029X428	Shield, Deflector
28	19111016	Washer 11/32 x 5/8 x 16 Ga.
29	121980X	Rod, Hinge
30	157722	Screw Thdrol Washer Head
31	129963	Washer, Spacer
32	153531	Pulley, Mandrel
33	137266	Nut, Toplock, Flanged
34	72110614	Bolt Rdhd 3/8-16 x 1-3/4
36	131494	Pulley, Idler, Flat
40	73680600	Nut Crownlock 3/8-16
45	4497H	Retainer, Spring
53	130840	Brake Assembly
54	133943	Washer, Hardened
55	133840	Idler Arm Assembly
56	165723	Spacer, Retainer
67	106932X	Knob RD 3/8-16 Plstc Thd
68	174978	Belt
69	76020312	Pin, Cotter 3/32 x 3/4
89	19131612	Washer 13/32 x 1 x 12 Ga
107	133502	Spacer, Retainer
108	133503	Stiffener, Idler Arm
113	17490508	Screw Thdrol 5/16-18 x 1/2
122	174505	Rod, Brake, LH
123	174504	Rod, Brake, RH
146	165891	Bolt Carriage Idler
148	169022	Spring Return Idler
149	165898	Retainer Spring Yellow Zinc
150	19091216	Washer 9/32 x 3/4 x 16 Ga.
151	169670	Bracket Clutch
152	176079	Cable Clutch
153	169674	Washer Flat 3/8" Type B
154	169675	Spring Retainer
155	169671	Spring Retention Lever
156	169672	Spacer
157	169669	Rod Clutch
158	17720410	Screw Hex Thd Cut 1/4-20x5/8
164	174976	Bracket Asm Idler Support
168	172377	Bracket Deck Cable
169	174977	Bracket Asm Suspension
170	172359	Bracket Suspension RF
171	165237	Bracket Support Suspension Frt
172	172355	Bracket Suspension LF
- -	130794	Mandrel Assembly (Includes Key Numbers 13-15, 17-19, 31 and 33)
- -	175254	Mower Deck, Complete

NOTE: All component dimensions given in U.S. inches
1 inch = 25.4 mm

TRACTOR - - MODEL NO. BL125T36 (BLT12536A), PRODUCT NO. 954 56 68-36

SCHEMATIC

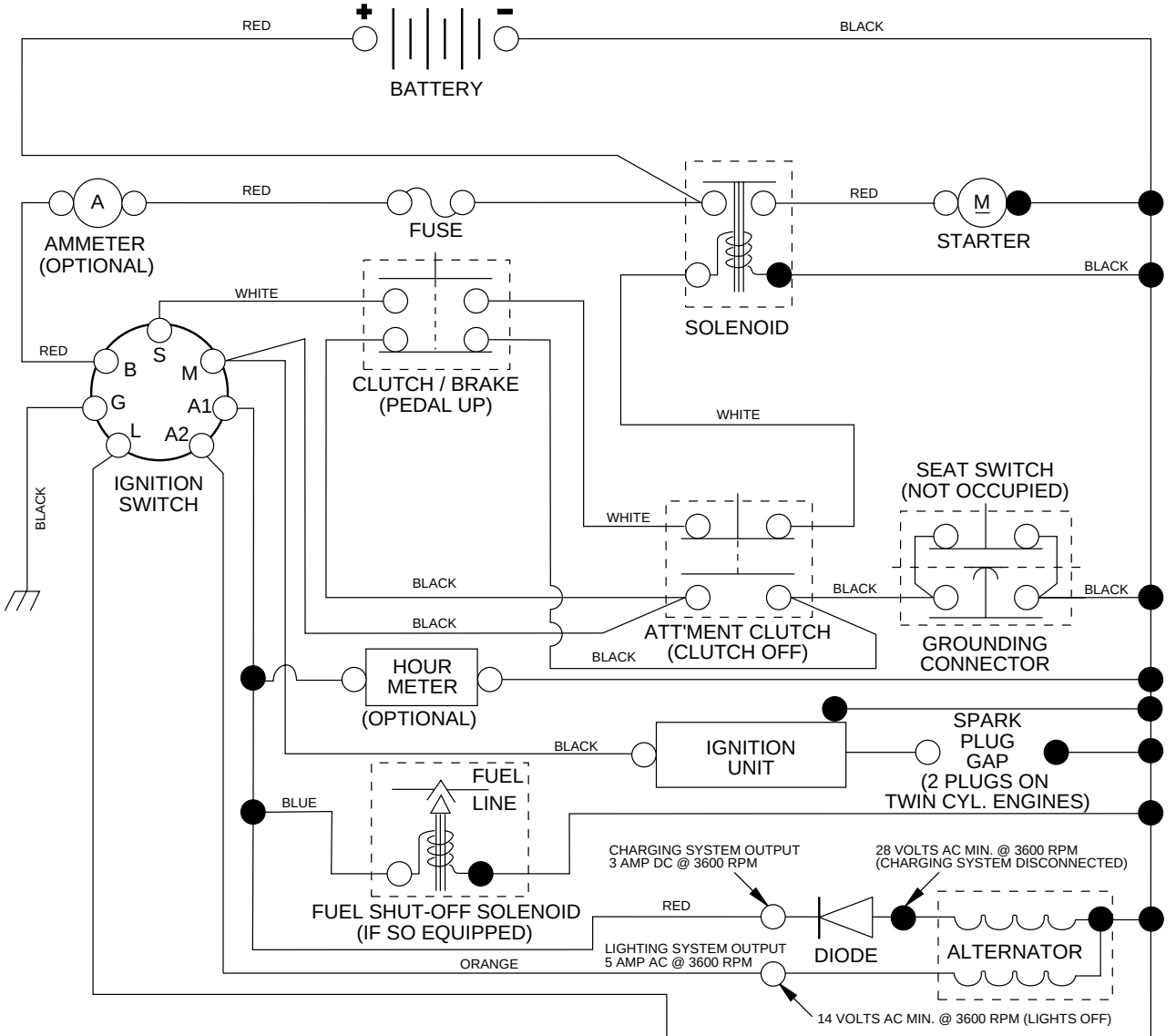

NOTE

YOUR TRACTOR IS EQUIPPED WITH A SPECIAL ALTERNATOR SYSTEM. THE LIGHTS ARE NOT CONNECTED TO THE BATTERY, BUT HAVE THEIR OWN ELECTRICAL SOURCE. BECAUSE OF THIS, THE BRIGHTNESS OF THE LIGHTS WILL CHANGE WITH ENGINE SPEED. AT IDLE THE LIGHTS WILL DIM. AS THE ENGINE IS SPEEDED UP, THE LIGHTS WILL BECOME THEIR BRIGHTEST.

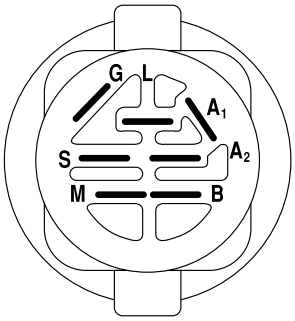

IGNITION SWITCH

POSITION	CIRCUIT	"MAKE"
OFF	M+G+A1	NONE
RUN/LIGHT	B+A1	A2+L
RUN	B+A1	NONE
START	B + S + A1	NONE

NON-REMOVABLE CONNECTIONS

REMOVABLE CONNECTIONS

WIRING INSULATED CLIPS

NOTE: IF WIRING INSULATED CLIPS WERE REMOVED FOR SERVICING OF UNIT, THEY SHOULD BE REPLACED TO PROPERLY SECURE YOUR WIRING.