Genuine Spare Parts

www.stiga.com

SR 6365B
Model Year 2012

- Use GLOBAL GARDEN PRODUCT Genuine Spare Parts specified in the parts list for repair and/or replacement.
- The contents described in the parts list may change due to improvement.
- The drawings of the spare parts are only indicative and might not represent the part in question exactly.
- The indications “right” - “left” - “front” - “rear” refer to the position of the operator when using the machine.
- When placing orders of parts for repair and/or replacement, make sure that the illustrated parts list is the one applying to the machine’s year of manufacture, as shown on the identification plate attached to the machine.

© Copyright 2011 Global Garden Products
All content is subject to copyright by Global Garden Products and may not be reproduced in whole or in part by any means, electronic or otherwise, without prior written approval.
THIS INFORMATION IS NOT INTENDED FOR SALE OR RESALE, AND THIS NOTICE MUST REMAIN ON ALL COPIES.

STIGA®

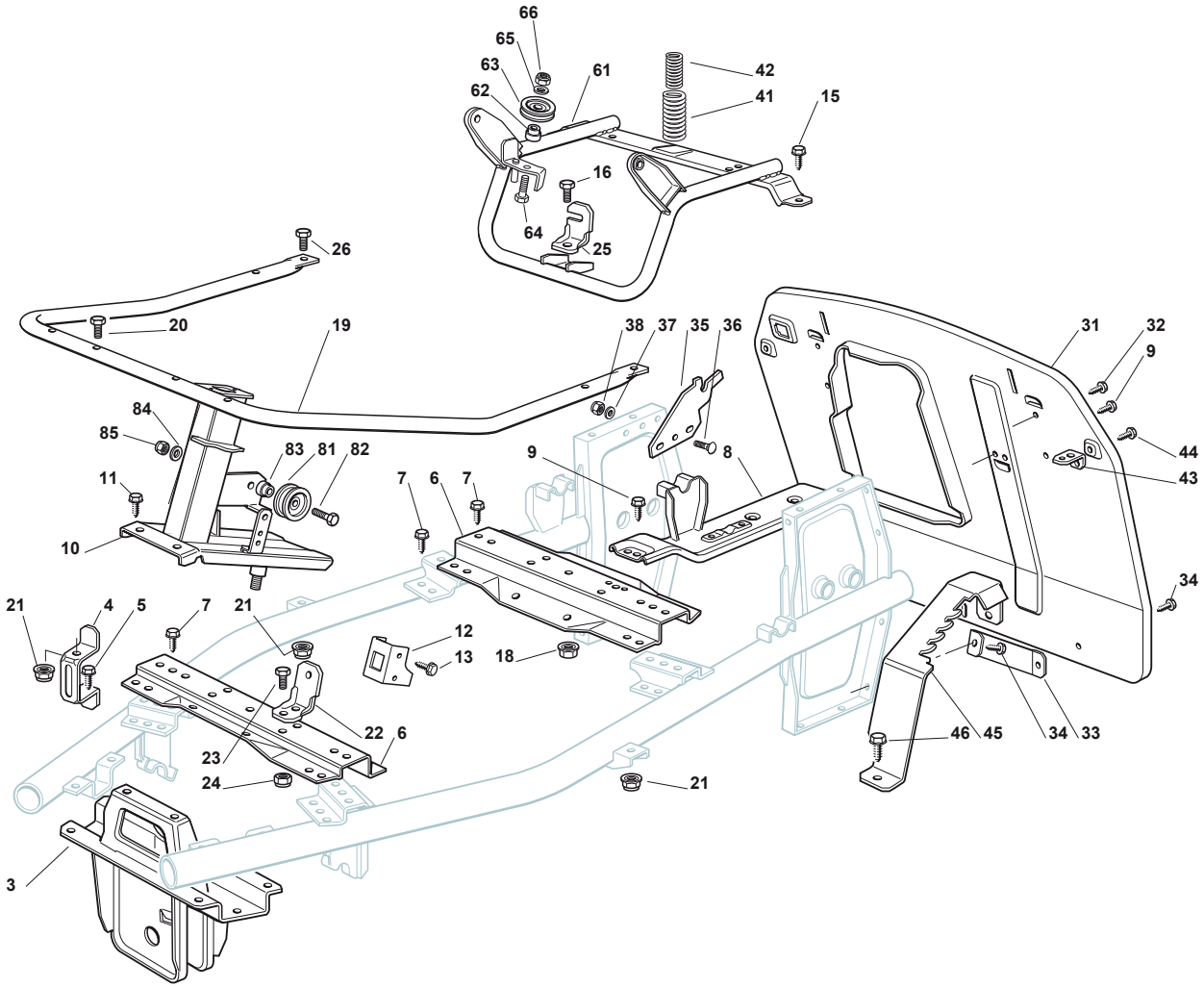

© Copyright 2011 Global Garden Products

N.	CODE	Q.TY	DESCRITPION	DESCRITPION
3	84783015/1	1	Support	Support
4	27772121/0	2	Etrier	Clamp
5	12735121/0	6	Vis	Screw
6	27650115/1	2	Renforcement	Stiffening
7	12735121/0	10	Vis	Screw
8	84650105/0	1	Renforcement	Stiffening
9	12735121/0	4	Vis	Screw
10	384783055/0	1	Support	Support
11	12735121/0	6	Vis	Screw
12	27772095/0	1	Support	Support
13	12735105/0	2	Vis	Screw
15	12735121/0	2	Vis	Screw
16	12793701/0	1	Vis	Screw
18	12293201/0	1	Ecrou	Nut
19	27869057/0	1	Support	Support
20	12792099/0	2	Vis	Screw
21	12154510/0	4	Ecrou	Nut
22	27773077/0	1	Equerre	Angle Bracket
23	12791011/0	1	Vis	Screw
24	12154510/0	1	Ecrou	Nut
25	27753081/0	1	Equerre	Angle Bracket
26	12791500/0	2	Vis	Screw
31	84545061/0	1	Plaque Arriere	Rear Plate
32	12735121/0	4	Vis	Screw
33	27650111/0	2	Renforcement	Stiffening
34	12735121/0	4	Vis	Screw
35	27772131/0	2	Etrier	Clamp
36	12818690/0	2	Vis	Screw
37	12521350/0	2	Rondelle	Washer
38	12155000/0	2	Ecrou	Nut
41	27430567/0	1	Ressort	Spring
42	27430569/1	1	Ressort	Spring
43	27753073/0	2	Equerre	Angle Bracket
44	12729600/0	2	Vis	Screw
45	27734059/0	1	Cremaillere	Rack
46	12735121/0	2	Vis	Screw
61	384801141/0	1	Support	Support
62	22170910/0	1	Pivot	Pin
63	81003375/1	1	Roulettes	Wheel
64	12691200/0	1	Vis	Screw
65	12523060/0	1	Rondelle	Washer
66	12155000/0	1	Ecrou	Nut
81	81003375/1	1	Roulettes	Wheel
82	12691200/0	1	Vis	Screw
83	22170910/0	1	Pivot	Pin
84	12523060/0	1	Rondelle	Washer
85	12155000/0	1	Ecrou	Nut

© Copyright 2011 Global Garden Products

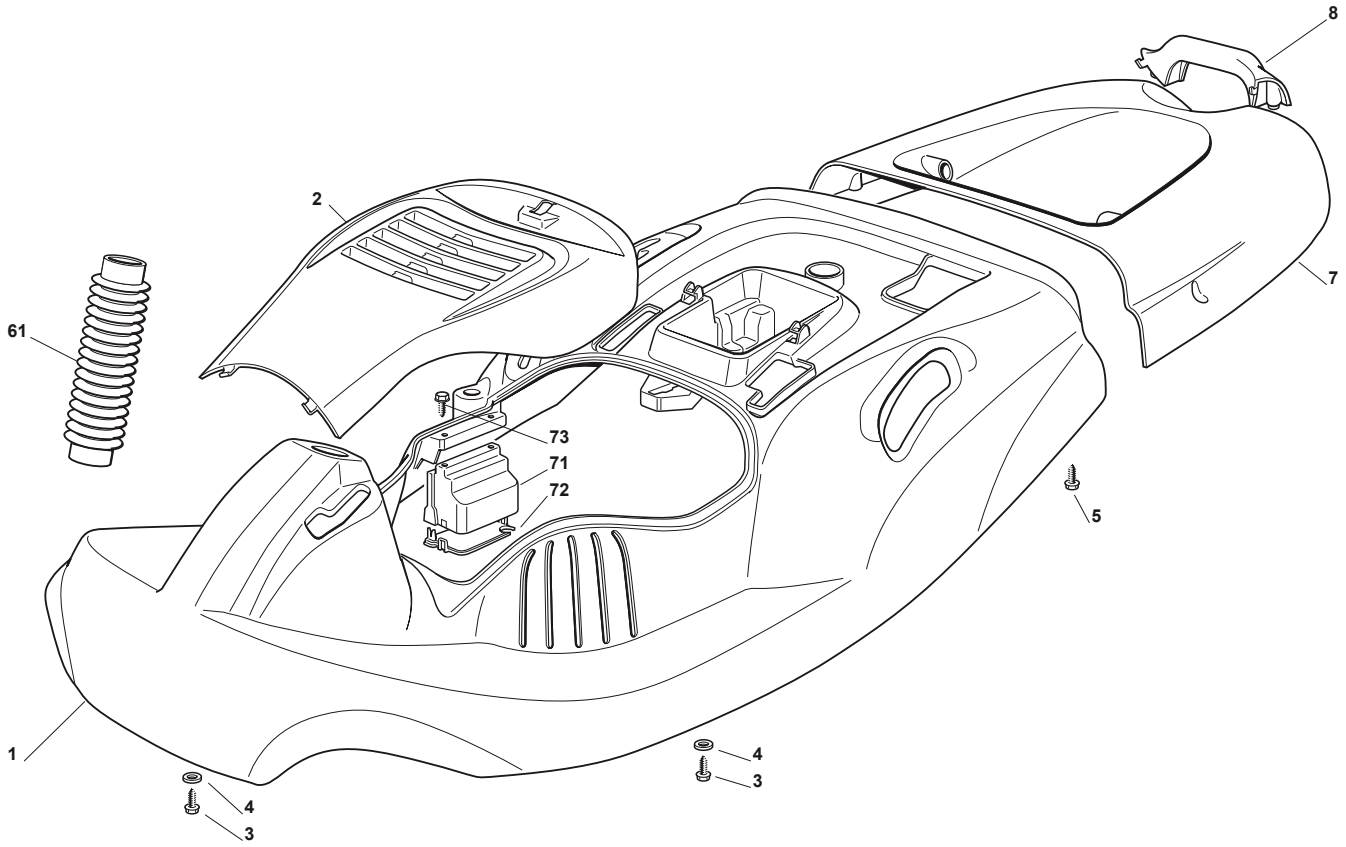

© Copyright 2011 Global Garden Products

N.	CODE	Q.TY	DESCRITPION	DESCRITPION
1	327110397/0	1	Couvre Roues Noir	Wheels Cover Black
2	27110372/0	1	Couvre Moteur Jaune	Engine Cover Yellow
3	12735410/0	4	Vis	Screw
4	12523040/0	4	Rondelle	Washer
5	12735402/0	2	Vis	Screw
7	27110398/0	1	Couvre-Bac Noir	Grass-Catcher Cover, Black
8	27394000/0	1	Poignee	Handle
61	27600114/1	1	Protection	Guard
71	27600119/0	1	Protection	Guard
72	27600118/0	1	Protection	Guard
73	12727810/0	2	Vis	Screw

© Copyright 2011 Global Garden Products

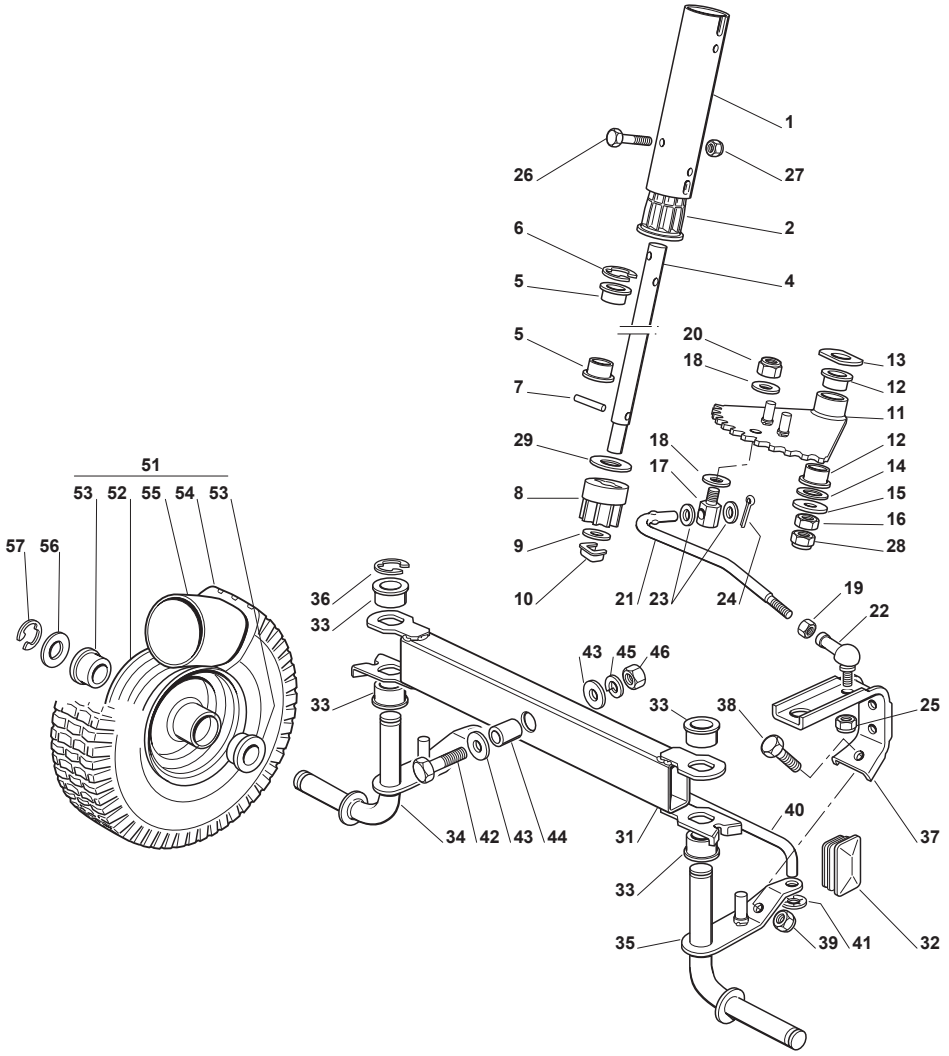

© Copyright 2011 Global Garden Products

N.	CODE	Q.TY	DESCRITPION	DESCRITPION
1	27340305/1	1	Tube Extension	Colum Extension
2	27047005/1	1	Douille	Bush
4	27520052/0	1	Tube De Direction	Steering Column
5	27047004/0	2	Douille	Bush
6	12001010/0	1	Anneau Ressort	Snap Ring
7	12622650/0	1	Goupille	Pin
8	27570050/0	1	Pignon	Pinion
9	12521370/0	1	Rondelle	Washer
10	12436030/0	1	Plaquette	Plate
11	84735553/1	1	Couronne	Ring Gear
12	27047004/0	2	Douille	Bush
13	27670054/0	1	Rondelle	Washer
14	22672152/0	1	Rondelle	Washer
15	12523070/0	1	Rondelle	Washer
16	12293200/0	1	Ecrou	Nut
17	25510056/0	1	Pivot	Pin
18	25670008/1	2	Rondelle	Washer
19	12293200/0	1	Ecrou	Nut
20	12156602/0	1	Ecrou	Nut
21	27034066/2	1	Barre	Rod
22	122746610/0	1	Joint	Joint
23	25670008/1	2	Rondelle	Washer
24	12141418/0	1	Goupille	Cotter Pin
25	12155000/0	1	Ecrou	Nut
26	12689515/0	2	Vis	Screw
27	12154510/0	2	Ecrou	Nut
28	12155000/0	1	Ecrou	Nut
29	27670054/0	1	Rondelle	Washer
31	84034059/0	1	Balancier	Equalizer
32	18737852/0	2	Bouchon	Cap
33	27047004/0	4	Douille	Bush
34	84230405/0	1	Fuseau Droite	Right Stub Axle
35	84230407/0	1	Fuseau Gauche	Left Stub Axle
36	12000970/0	1	Anneau Ressort	Snap Ring
37	27787041/0	1	Support	Support
38	12793102/0	1	Vis	Screw
39	12155000/0	1	Ecrou	Nut
40	27840051/0	1	Tirant	Tie Rod
41	12604899/0	2	Fixateur A Couronne	Crown Fastener
42	12692695/0	1	Vis	Screw
43	12523100/0	2	Rondelle	Washer
44	25160016/0	1	Entretoise	Spacer
45	12587100/0	1	Grower	Grower
46	12295300/0	1	Ecrou	Nut
51	84680056/1	2	Roue Avant	Front Wheel
52	84044002/0	2	Bandage Roue	Rimm
53	27045070/0	4	Douille	Bush
54	27590058/0	2	Pneu	Shoe
55	27590056/0	2	Chambre A Aire	Inner Tube
56	12521390/0	2	Rondelle	Washer
57	12000970/0	2	Anneau Ressort	Snap Ring

© Copyright 2011 Global Garden Products

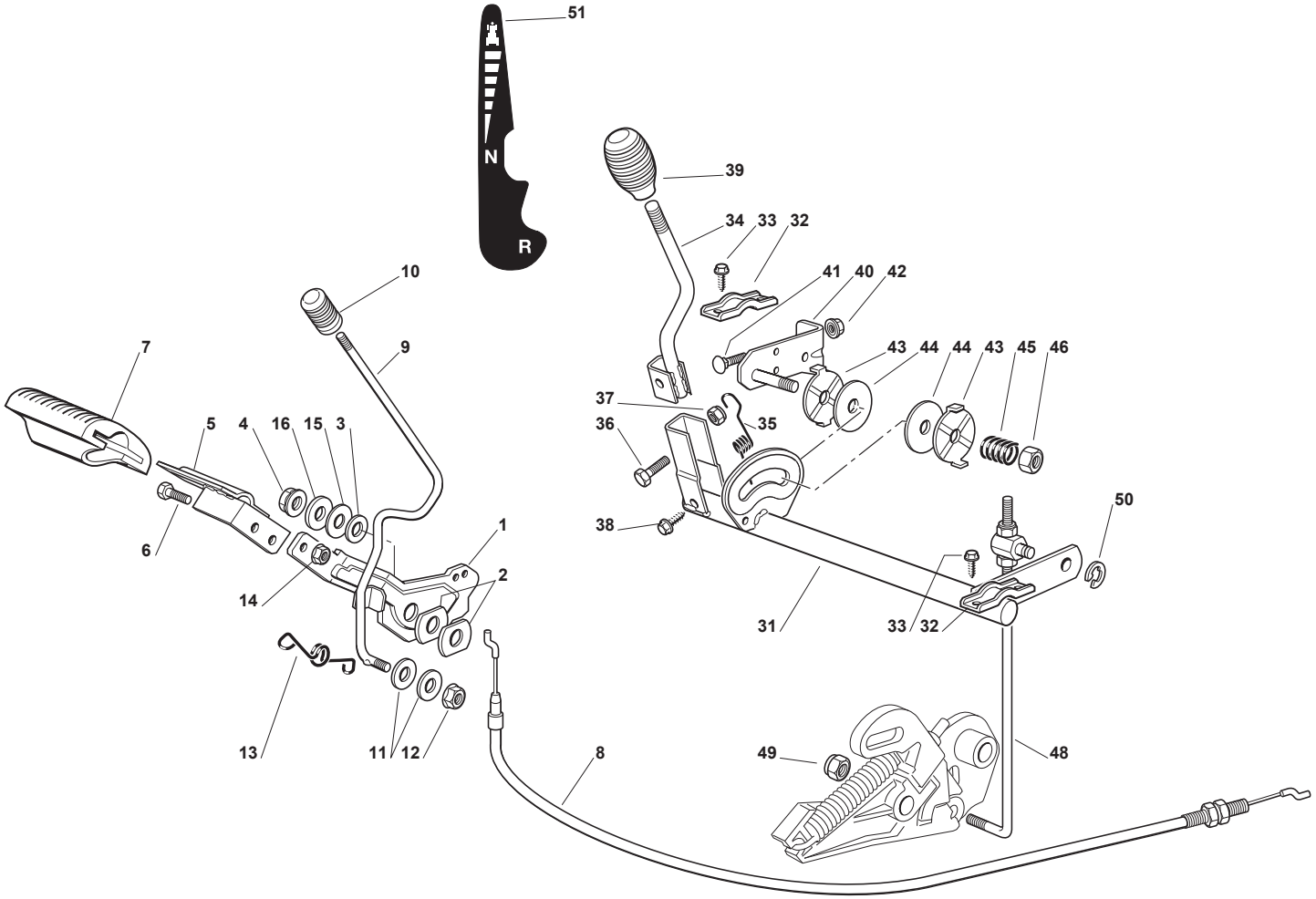

© Copyright 2011 Global Garden Products

N.	CODE	Q.TY	DESCRITPION	DESCRITPION
1	27500051/0	1	Pedal	Pedal
2	27670054/0	2	Rondelle	Washer
3	12521350/0	1	Rondelle	Washer
4	12154210/0	1	Ecrou	Nut
5	84503005/0	1	Pedal Superieur	Pedal Upper
6	112791200/1	2	Vis	Screw
7	25110269/0	1	Couvre Etrier	Clamp Cover
8	184207107/0	1	Fil	Cable
9	27034064/1	1	Barre	Rod
10	27395050/1	1	Poignee	Knob
11	25670011/0	2	Rondelle	Washer
12	12154210/0	1	Ecrou	Nut
13	27430564/0	1	Ressort	Spring
14	12292102/0	2	Ecrou	Nut
15	27670055/0	1	Rondelle	Washer
16	12523060/0	1	Rondelle	Washer
31	384001027/0	1	Axe	Axle
32	27546015/1	2	Plaque	Plate
33	12729600/0	4	Vis	Screw
34	84317071/0	1	Levier	Gearshift
35	27430570/1	1	Ressort	Spring
36	12674700/0	1	Vis	Screw
37	12154510/0	1	Ecrou	Nut
38	12729600/0	1	Vis	Screw
39	25394510/0	1	Poignee	Knob
40	384783047/0	1	Support	Bracket
41	12818690/0	2	Vis	Screw
42	12293201/0	2	Ecrou	Nut
43	27670053/0	2	Rondelle	Washer
44	127207000/0	2	Pastille Frein	Lining
45	27430560/0	1	Ressort	Spring
46	12155020/0	1	Ecrou	Nut
48	384002084/1	1	Barre	Rod
49	12150000/0	1	Ecrou	Nut
50	12604897/0	1	Anneau Ressort	Snap Ring
51	114362319/0	1	Etiquette	Label

© Copyright 2011 Global Garden Products

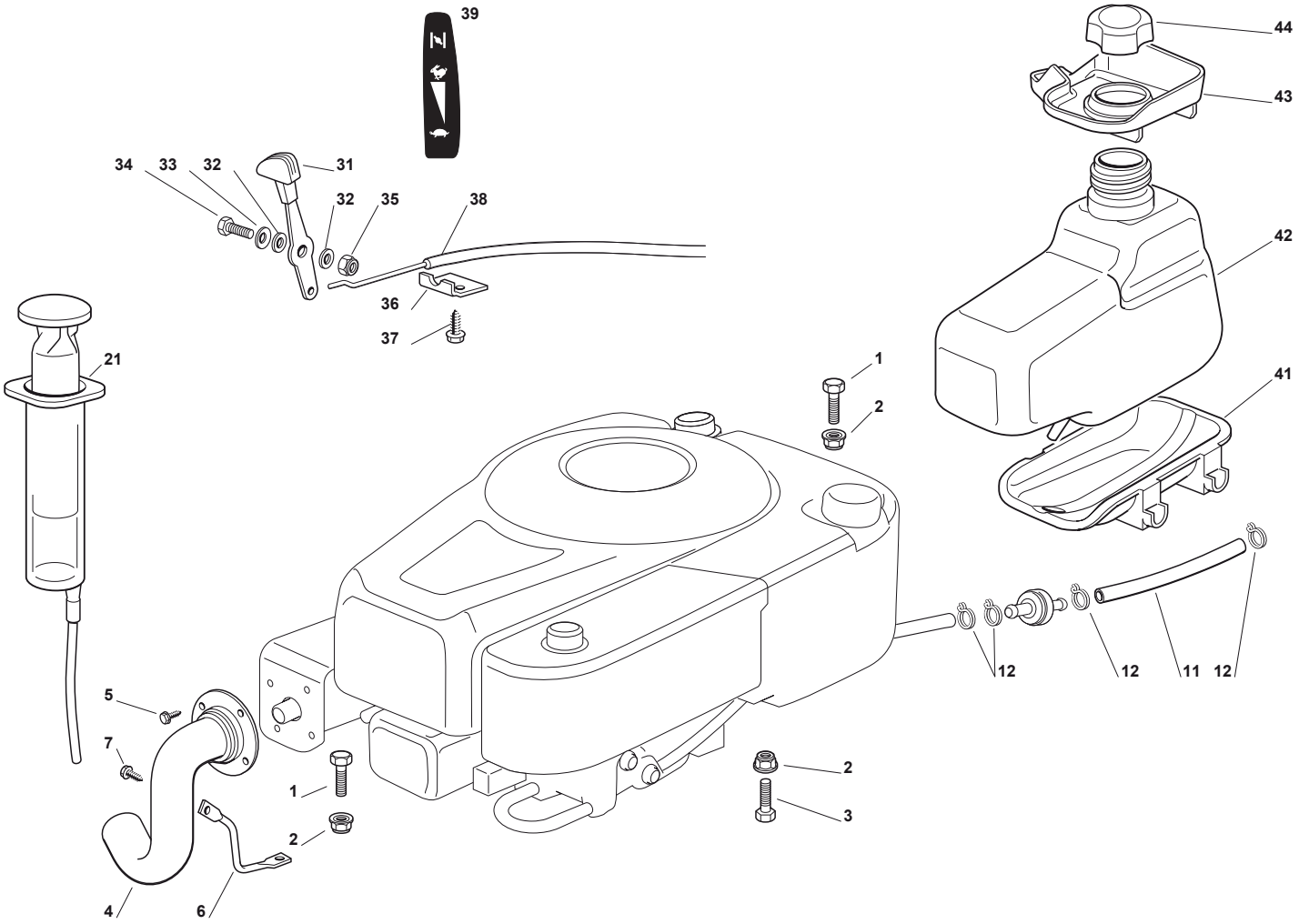
39
44
43
34
33
32
31
32
35
38
42
36
37
21
1
41
2
12
12
11
12
5
7
1
2
2
3
4
6

N.	CODE	Q.TY	DESCRITPION	DESCRITPION
1	12691100/0	2	Vis	Screw
2	12154210/0	3	Ecrou	Nut
3	12691800/0	1	Vis	Screw
4	118738245/0	1	Tube De Echappement	Exauste Tube
5	12735104/0	1	Vis	Screw
6	127787077/0	1	Support	Bracket
7	12735110/0	1	Vis	Screw
11	25869033/1	1	Tube	Tube
12	18375051/1	2	Fixation De Cable	Fair Led
21	18718000/0	1	Seringue	Syringe
31	384317094/0	1	Levier Accelerateur	Accelerator Lever
32	12523040/0	2	Rondelle	Washer
33	12530060/0	1	Rondelle	Washer
34	12791500/0	1	Vis	Screw
35	12154510/0	1	Ecrou	Nut
36	22981467/0	1	Plaque	Plate
37	12735105/0	2	Vis	Screw
38	184000254/0	1	Cable Accelerateur	Throttle Cable
39	114364614/0	1	Etiquette	Label
41	27787057/0	1	Support	Support
42	27733002/1	1	Reservoir	Tank
43	27600113/0	1	Protection	Guard
44	27790000/1	1	Bouchon	Cap

© Copyright 2011 Global Garden Products

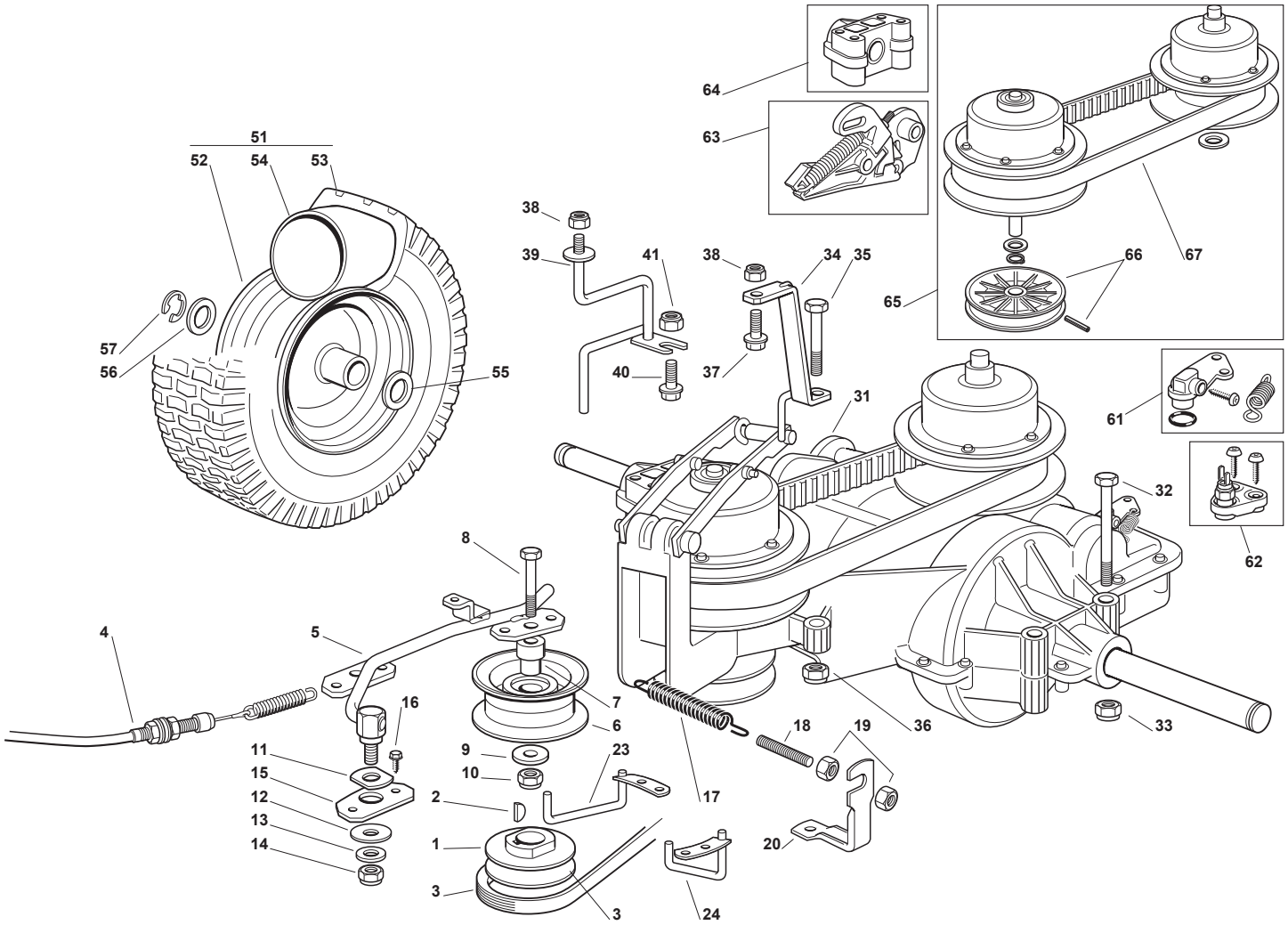
51
52
54
53
57
56
55
38
39
41
40
38
34
35
37
31
64
63
65
66
67
61
62
32
8
4
5
16
7
6
11
15
12
13
14
9
10
23
2
1
3
3
17
18
19
36
33
20
24

N.	CODE	Q.TY	DESCRITPION	DESCRITPION
1	127604012/0	1	Poulie	Pulley
2	12139100/0	1	Clavette	Feather
3	135061427/0	1	Courroie	Belt
4	84207103/2	1	Fil	Cable
5	384317091/0	1	Levier	Lever
6	27604007/0	1	Poulie	Pulley
7	27047007/0	1	Douille	Bush
8	12691200/0	1	Vis	Screw
9	12523060/0	1	Rondelle	Washer
10	12155000/0	1	Ecrou	Nut
11	27670054/0	1	Rondelle	Washer
12	12523070/0	1	Rondelle	Washer
12	119700064/0	1	Int. Boîte De Vitesse	Gearbox Switch
13	25670011/0	1	Rondelle	Washer
14	12155000/0	1	Ecrou	Nut
15	27546029/0	1	Plaque	Plate
16	12735121/0	2	Vis	Screw
17	25430219/0	1	Ressort	Spring
18	25840005/0	1	Tirant	Tie Rod
19	12293200/0	2	Ecrou	Nut
20	327773081/1	1	Equerre	Angle Bracket
23	382270305/0	1	Plaque	Plate
24	382270307/0	1	Plaque	Plate
31	118400973/1	1	Groupe Transmission	Transmission Unit
32	12692050/0	4	Vis	Screw
33	12154210/0	4	Ecrou	Nut
34	384783045/0	1	Support	Support
35	12691115/0	1	Vis	Screw
36	12154210/0	1	Ecrou	Nut
37	12793102/0	1	Vis	Screw
38	12154210/0	2	Ecrou	Nut
39	384783043/0	1	Support	Support
40	12793301/0	1	Vis	Screw
41	12154210/0	1	Ecrou	Nut
51	84680057/1	2	Roue Arriere	Rear Wheel
52	84044005/0	2	Bandage Roue	Rimm
53	27590059/0	2	Pneu	Shoe
54	27590057/0	2	Chambre A Aire	Inner Tube
55	12521410/0	2	Rondelle	Washer
56	25670005/1	2	Rondelle	Washer
57	12001010/0	2	Anneau Ressort	Snap Ring
61	119700059/0	1	Kit Frein	Brake Kit
63	119700065/0	1	Groupe Commande	Control Unit
64	119700061/0	1	Douille	Bush
65	119700057/0	1	Kit Variateur	Variator Kit
66	119700066/0	1	Poulie	Pulley
67	119700062/0	1	Courroie	Belt

© Copyright 2011 Global Garden Products

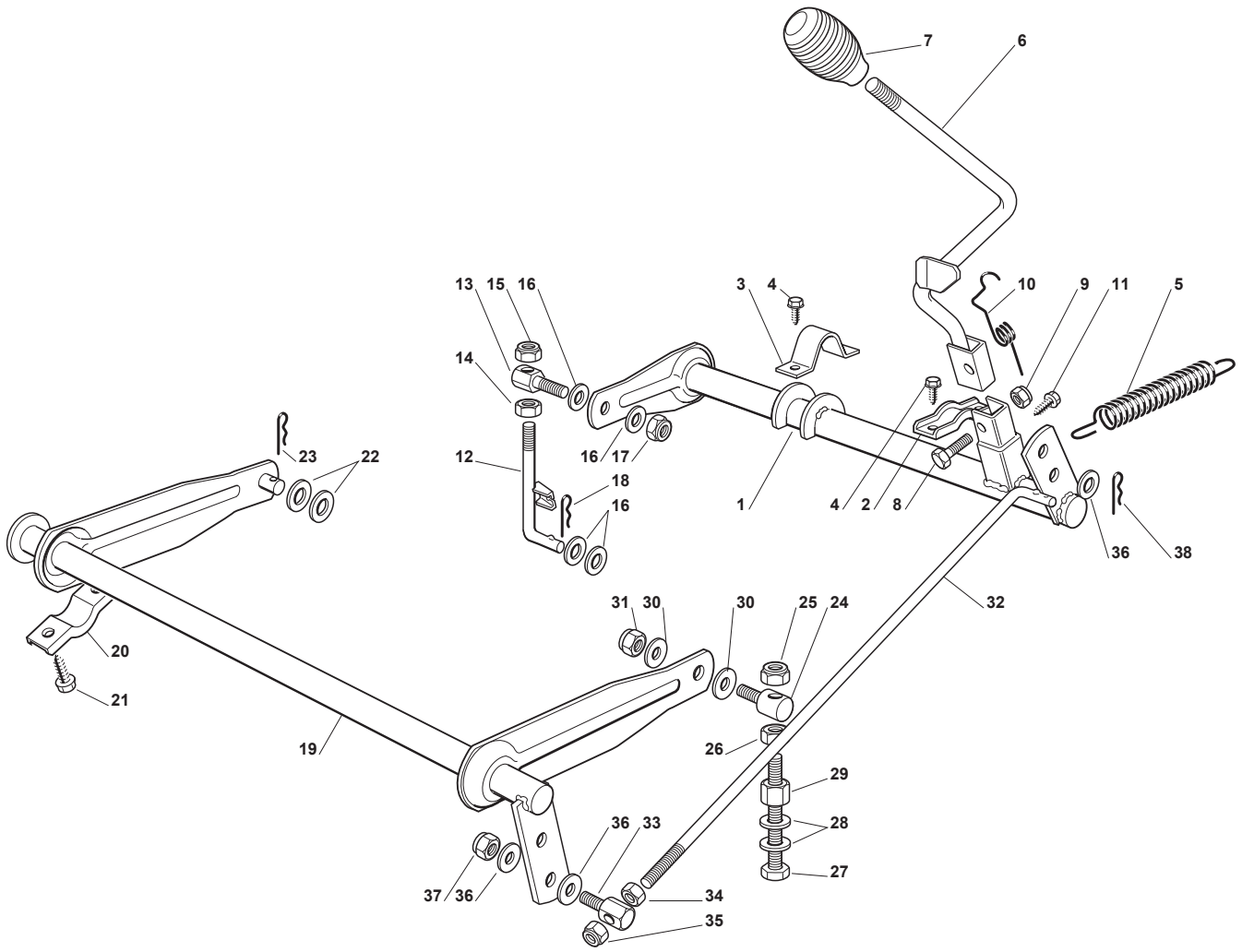
7
6
13
15
16
3
4
10
9
11
5
14
23
22
12
16
17
18
16
1
4
2
8
36
38
32
31
30
30
25
24
20
21
19
26
29
28
36
33
27
37
36
34
35

N.	CODE	Q.TY	DESCRITPION	DESCRITPION
1	84001017/0	1	Axe	Axle
2	27546015/1	1	Plaque	Plate
3	25547037/1	1	Plaque	Plate
4	12729600/0	4	Vis	Screw
5	27430568/0	1	Ressort	Spring
6	84317075/0	1	Levier	Gearshift
7	25394510/0	1	Poignee	Knob
8	12674700/0	1	Vis	Screw
9	12154510/0	1	Ecrou	Nut
10	27430574/0	1	Ressort	Spring
11	12729600/0	4	Vis	Screw
12	327034087/0	1	Barre	Rod
13	25510056/0	1	Pivot	Pin
14	12295200/0	1	Ecrou	Nut
15	12156602/0	1	Ecrou	Nut
16	25670008/1	4	Rondelle	Washer
17	12156602/0	1	Ecrou	Nut
18	24487997/0	1	Goupille	Cotter Pin
19	84001019/0	1	Axe	Axle
20	27546015/1	2	Plaque	Plate
21	12731350/0	4	Vis	Screw
22	25670008/1	2	Rondelle	Washer
23	24487997/0	1	Goupille	Cotter Pin
24	125510007/2	1	Pivot	Pin
25	12156602/0	1	Ecrou	Nut
26	12295200/0	1	Ecrou	Nut
27	12794970/0	1	Vis	Screw
28	12521360/0	2	Rondelle	Washer
29	12154250/0	1	Ecrou	Nut
30	25670008/1	2	Rondelle	Washer
31	12156602/0	1	Ecrou	Nut
32	27034065/0	1	Barre	Rod
33	25510040/1	1	Pivot	Pin
34	12293200/0	1	Ecrou	Nut
35	12155000/0	1	Ecrou	Nut
36	25670011/0	3	Rondelle	Washer
37	12155000/0	1	Ecrou	Nut
38	24487997/0	1	Goupille	Cotter Pin

© Copyright 2011 Global Garden Products

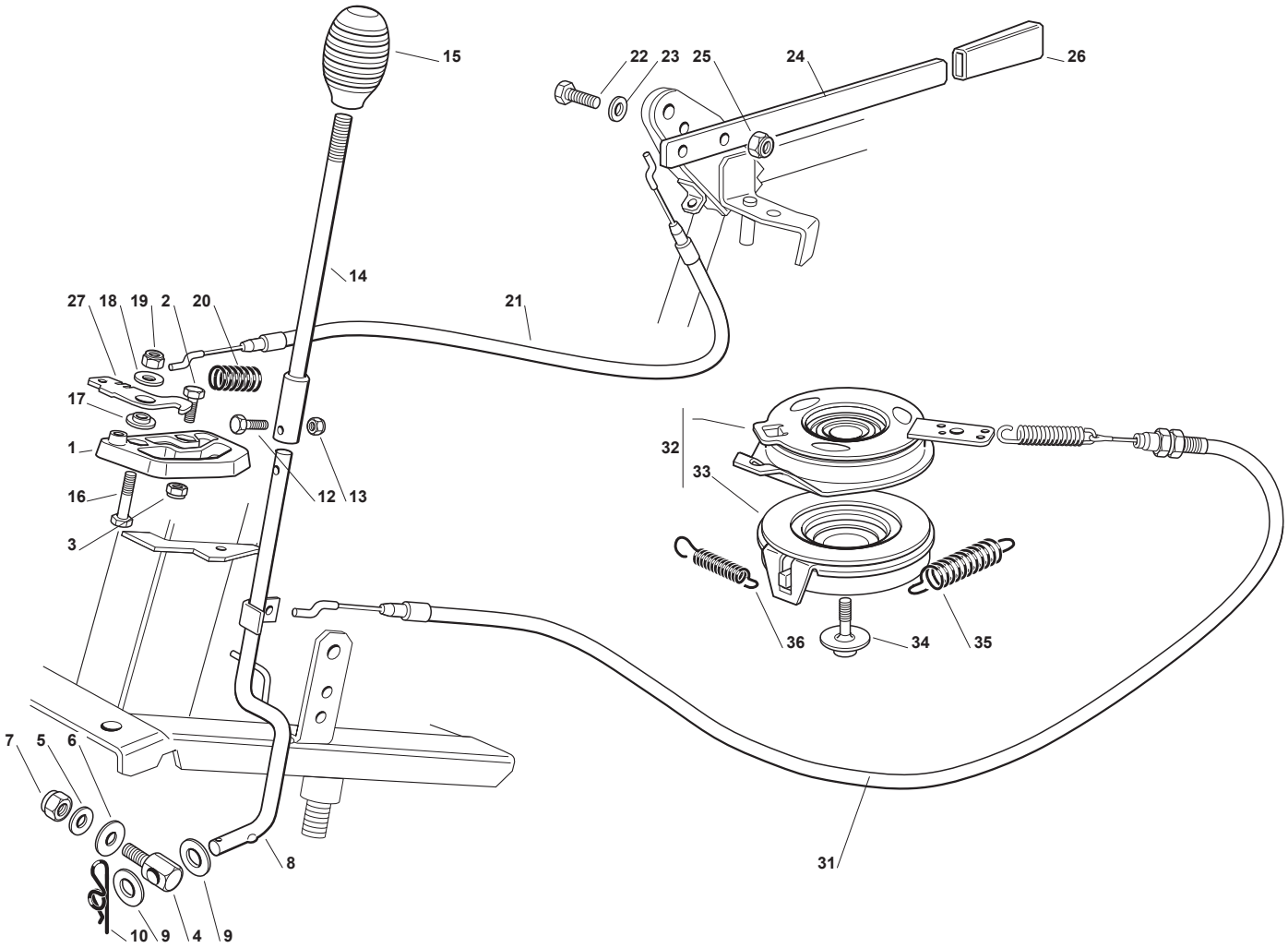

© Copyright 2011 Global Garden Products

N.	CODE	Q.TY	DESCRITPION	DESCRITPION
1	27487003/0	1	Bloc De Glissement	Shoe
2	112791200/1	2	Vis	Screw
3	12154510/0	2	Ecrou	Nut
4	27510107/0	1	Pivot	Pin
5	25670011/0	1	Rondelle	Washer
6	22672152/0	1	Rondelle	Washer
7	12155000/0	1	Ecrou	Nut
8	84317073/1	1	Levier	Lever
9	21660100/0	2	Butee	Thurst Washer
10	24487998/0	1	Goupille	Cotter Pin
12	12789020/0	1	Vis	Screw
13	12154330/0	1	Ecrou	Nut
14	84317079/0	1	Levier	Gearshift
15	25394510/0	1	Poignee	Knob
16	12792099/0	1	Vis	Screw
17	325160039/0	1	Entretoise	Spacer
18	12523040/0	1	Rondelle	Washer
19	12154510/0	1	Ecrou	Nut
20	25430206/1	1	Ressort	Spring
21	184000255/0	1	Fil	Cable
22	125510080/1	1	Pivot	Pin
23	12521350/0	1	Rondelle	Washer
24	327315131/0	1	Levier	Lever
25	12154510/0	1	Ecrou	Nut
26	22397000/0	1	Poignee	Knob
27	327253000/1	1	Accrochage	Hook
31	84207104/1	1	Fil	Cable
32	18399065/1	1	Ens. Embrayage Mecan.	Mechanical Clutch Ass.Y
33	18399066/1	1	Partie Infer. Embrayage	Clutch, Lower Part
34	12735460/0	1	Vis	Screw
35	27430579/0	1	Ressort	Spring
36	22450110/0	1	Ressort	Spring

© Copyright 2011 Global Garden Products

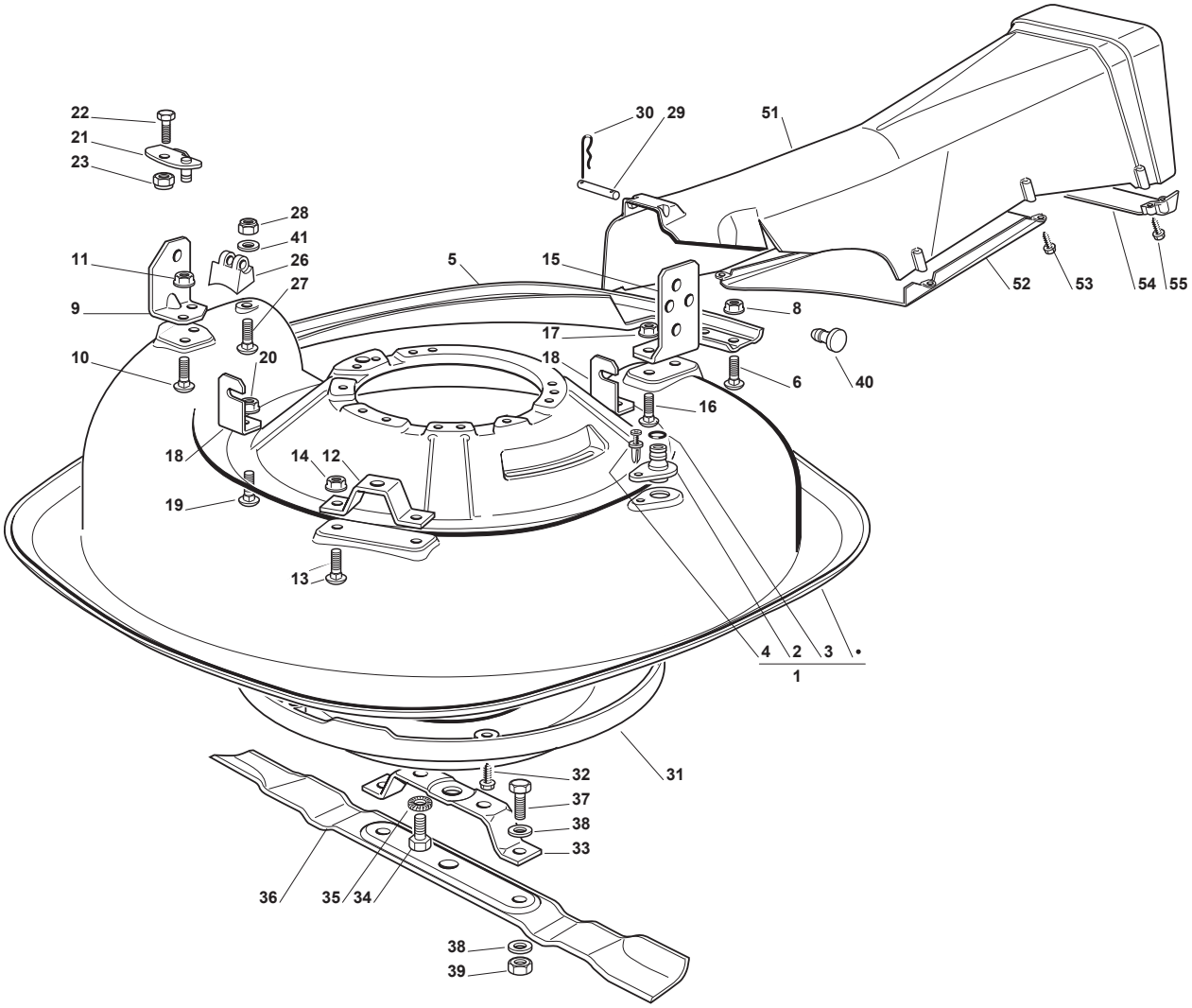
22
21
23
28
41
26
27
11
9
10
20
18
19
13
14
12
5
15
17
18
16
30
29
51
8
6
40
52
53
54
55
4
2
3
1
31
32
37
38
33
36
35
34
38
39

N.	CODE	Q.TY	DESCRITPION	DESCRITPION
1	384564095/1	1	Plateau De Coupe, Noir	Cutting Plate, Black
2	25033060/0	1	Raccord Tuyau D'Eau	Water Hose Connection
3	19035000/0	1	O Ring	O Ring
4	12500030/0	1	Rivet	Rivet
5	84650103/0	1	Renforcement	Stiffening
6	12815200/0	4	Vis	Screw
8	12292102/0	4	Ecrou	Nut
9	27772119/0	1	Etrier	Clamp
10	12818690/0	2	Vis	Screw
11	12293201/0	2	Ecrou	Nut
12	27772133/0	1	Etrier	Clamp
13	12818690/0	2	Vis	Screw
14	12293201/0	2	Ecrou	Nut
15	327772127/2	1	Etrier	Clamp
16	12818700/0	2	Vis	Screw
17	12293201/0	2	Ecrou	Nut
18	27753071/0	2	Equerre	Angle Bracket
19	12818690/0	2	Vis	Screw
20	12293201/0	2	Ecrou	Nut
21	84545063/0	1	Plaque	Plate
22	12792611/0	1	Vis	Screw
23	12155000/0	1	Ecrou	Nut
26	27230200/2	1	Accrochage	Hook
27	12815210/0	1	Vis	Screw
28	12154510/0	1	Ecrou	Nut
29	27510097/1	1	Pivot	Pin
30	24487997/0	2	Goupille	Cotter Pin
31	27600122/0	1	Protection	Guard
32	12728530/0	5	Vis	Screw
33	27787045/1	1	Support	Bracket
34	12794110/0	2	Vis	Screw
35	12540070/0	2	Rondelle	Washer
36	84109504/0	1	Lame	Blade
37	12793102/0	2	Vis	Screw
38	12523060/0	4	Rondelle	Washer
39	12155010/0	2	Ecrou	Nut
40	27275000/0	1	Caoutchouc	Grommet
41	12521330/0	1	Rondelle	Washer
51	27107502/0	1	Convoyeur	Conveyor
52	327140056/0	1	Deflecteur	Deflector
53	12735402/0	5	Vis	Screw
54	27650120/0	1	Renforcement	Stiffening
55	12735410/0	2	Vis	Screw

© Copyright 2011 Global Garden Products

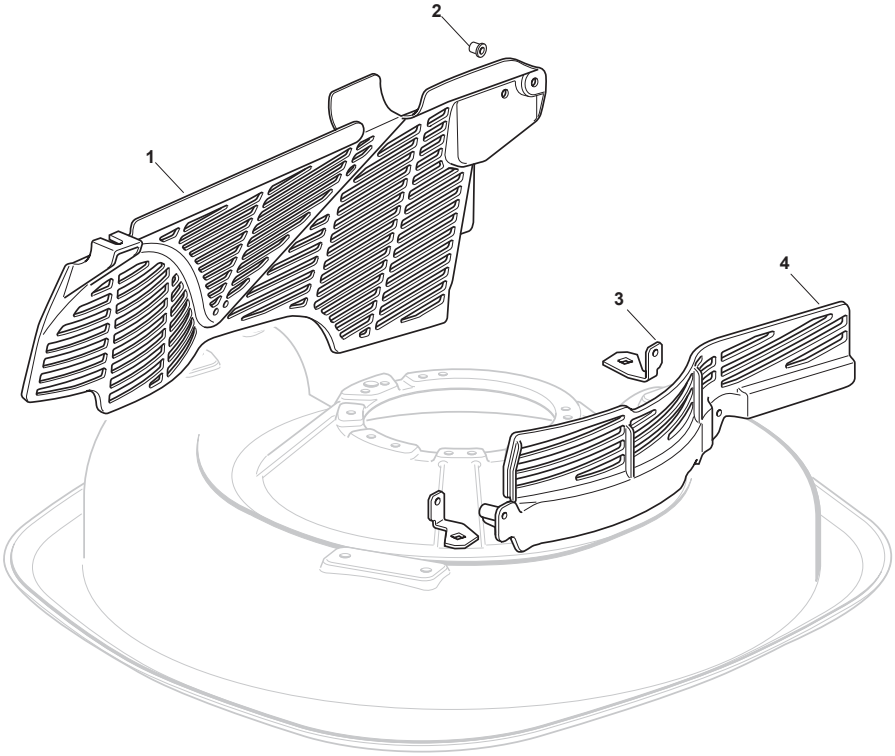
2
1
4
3

N.	CODE	Q.TY	DESCRITPION	DESCRITPION
1	327060106/0	1	Protection	Guard
2	127160058/0	1	Entretoise	Spacer
3	327773083/0	2	Equerre	Angle Bracket
4	327060107/0	1	Protection	Guard

© Copyright 2011 Global Garden Products

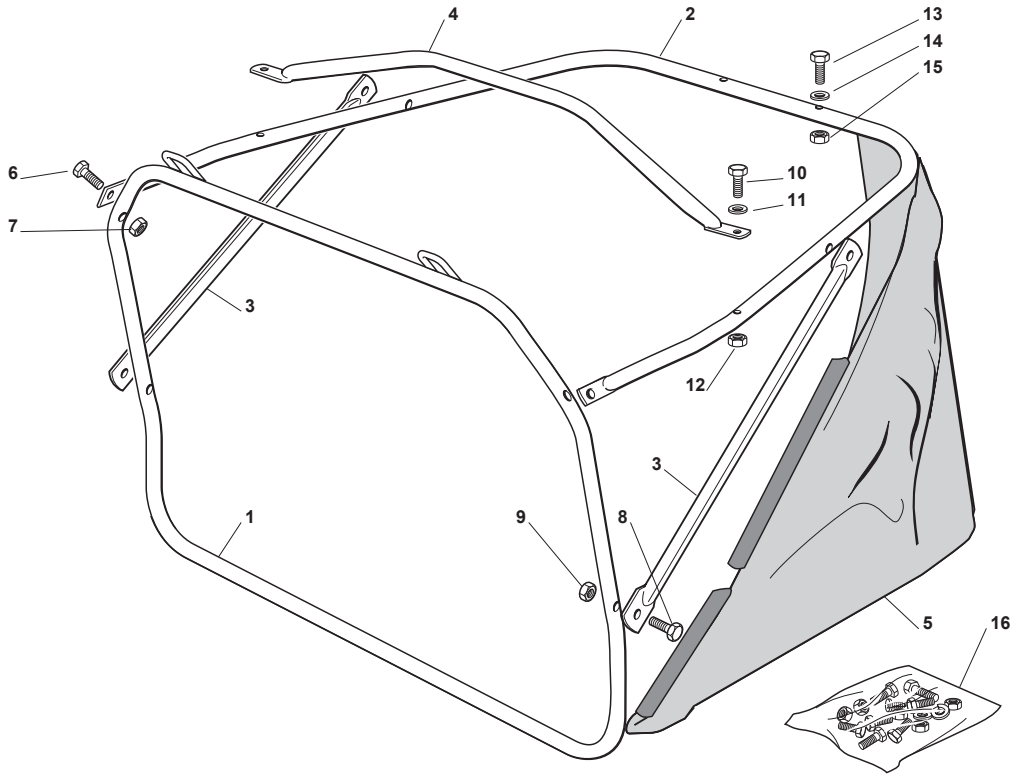

© Copyright 2011 Global Garden Products

N.	CODE	Q.TY	DESCRITPION	DESCRITPION
1	84801121/0	1	Chassis Anterieur	Front Frame
2	84801119/0	1	Chassis Superieur	Upper Frame
3	327650129/0	2	Renforcement	Stiffening
4	84394051/0	1	Poignee	Handle
5	184106068/0	1	Bac	Grasscatcher
6	12789020/0	2	Vis	Screw
7	12154330/0	2	Ecrou	Nut
8	12789020/0	4	Vis	Screw
9	12154330/0	4	Ecrou	Nut
10	12789210/0	2	Vis	Screw
11	12521331/0	2	Rondelle	Washer
12	12154330/0	2	Ecrou	Nut
13	12674530/0	2	Vis	Screw
14	12521331/0	2	Rondelle	Washer
15	12154330/0	2	Ecrou	Nut
16	84180186/0	1	Ensemble Des Vis (6÷15)	Screws Outfit (6÷15)

© Copyright 2011 Global Garden Products

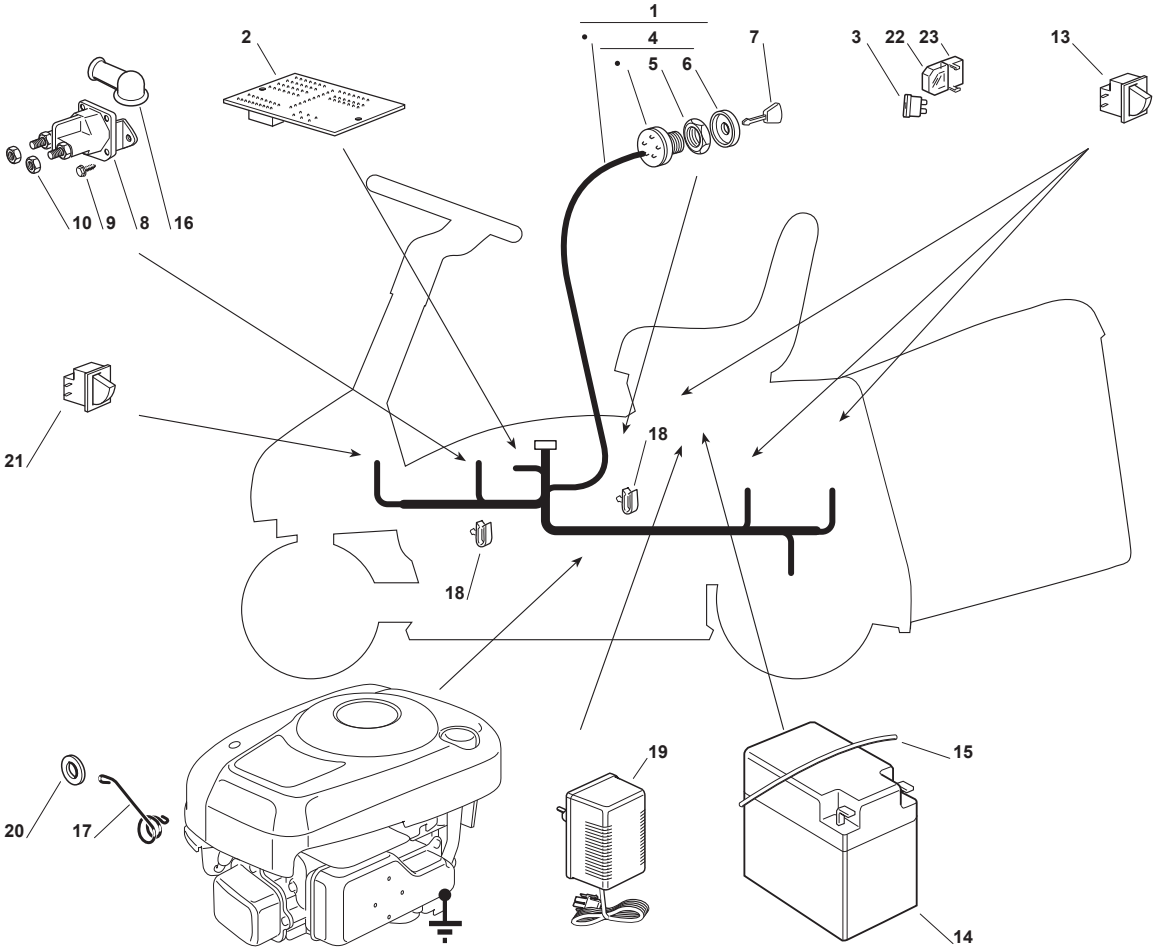

© Copyright 2011 Global Garden Products

N.	CODE	Q.TY	DESCRITPION	DESCRITPION
1	84040123/1	1	Cablages	Cables
2	27722354/0	1	Carte Electronique	Electronic Card
3	33340040/0	1	Fusible 10A	Fuse 10A
4	18450065/1	1	Interrupteur Demarrage	Starting Switch
5	18400861/0	1	Embout	Screwed Ring
6	18565351/0	1	Protection Embout	Screwed Ring Protection
7	18210016/1	1	Clef A Demarrage	Starting Key
8	18736111/0	1	Relais D'Allumage	Starter Relay
9	12735110/0	2	Vis	Screw
10	12360352/0	2	Ecrou	Nut
13	119410615/0	3	Microinterrupteur	Microswitch
14	18120004/0	1	Batterie	Battery
15	27430572/0	1	Ressort	Spring
16	18564861/1	1	Capuchon	Protection
17	27430557/0	1	Ressort	Spring
18	33320506/0	5	Fixation Cable	Fairlead
19	82180051/0	1	Chargeur Batteries	Battery Charger
20	12523020/0	1	Rondelle	Washer
21	119410612/1	1	Microinterrupteur	Microswitch
22	33215000/0	1	Couvercle	Cover
23	33500007/0	1	Tableau De Fusible	Fuse Carrier

© Copyright 2011 Global Garden Products

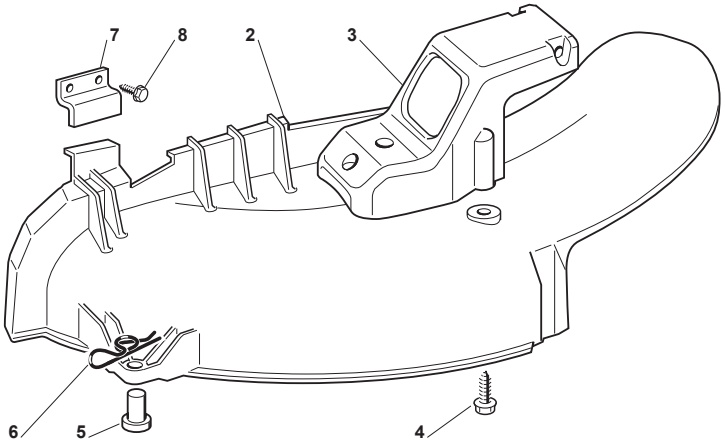
7
8
2
3
6
5
4

N.	CODE	Q.TY	DESCRITPION	DESCRITPION
2	27140052/0	1	Deflecteur	Deflector
3	27230201/0	1	Point D'Appui	Fulcrum
4	12735410/0	3	Vis	Screw
5	25510022/0	1	Pivot	Pin
6	24487998/0	1	Goupille	Cotter Pin
7	27772139/0	1	Etrier	Clamp
8	12735110/0	2	Vis	Screw

© Copyright 2011 Global Garden Products

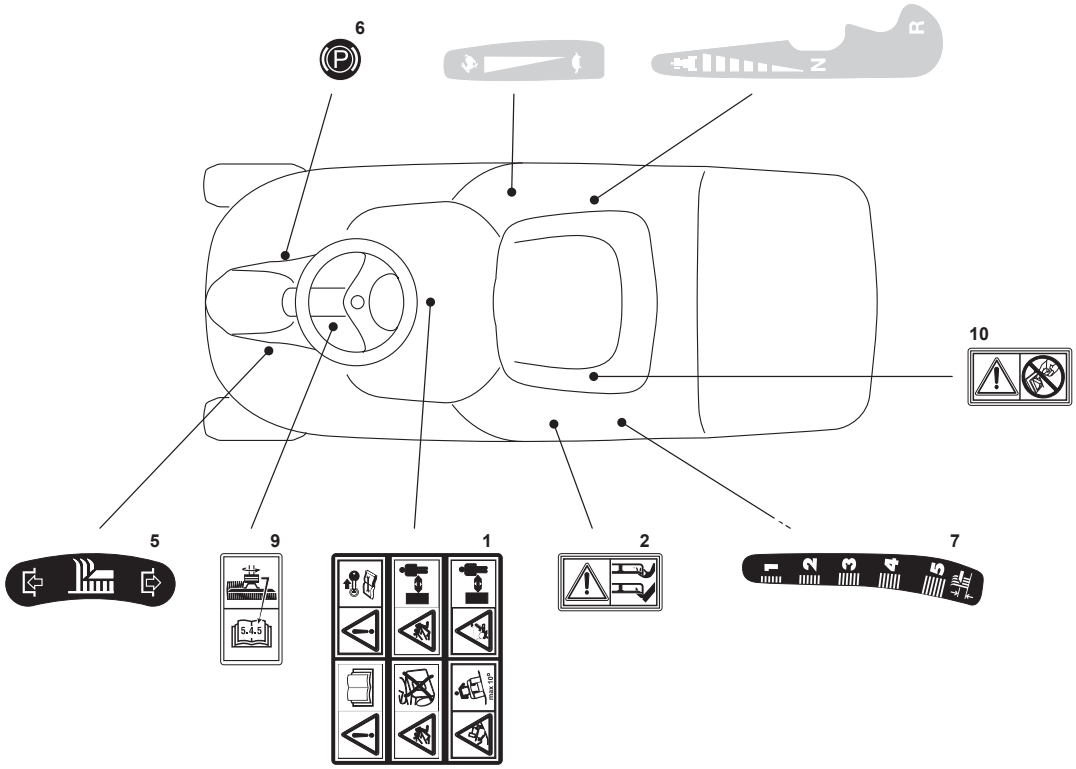
6
R
N
10
5
9
5.4.5
1
2
7
1
2
3
4
5

N.	CODE	Q.TY	DESCRITPION	DESCRITPION
1	114357428/1	1	Etiquette	Label
2	114356699/1	1	Etiquette	Label
5	14358418/0	1	Etiquette	Label
6	14358460/0	1	Etiquette	Label
7	14358417/0	1	Etiquette	Label
9	114358654/1	1	Etiquette	Label
10	14360118/0	1	Etiquette	Label

© Copyright 2011 Global Garden Products

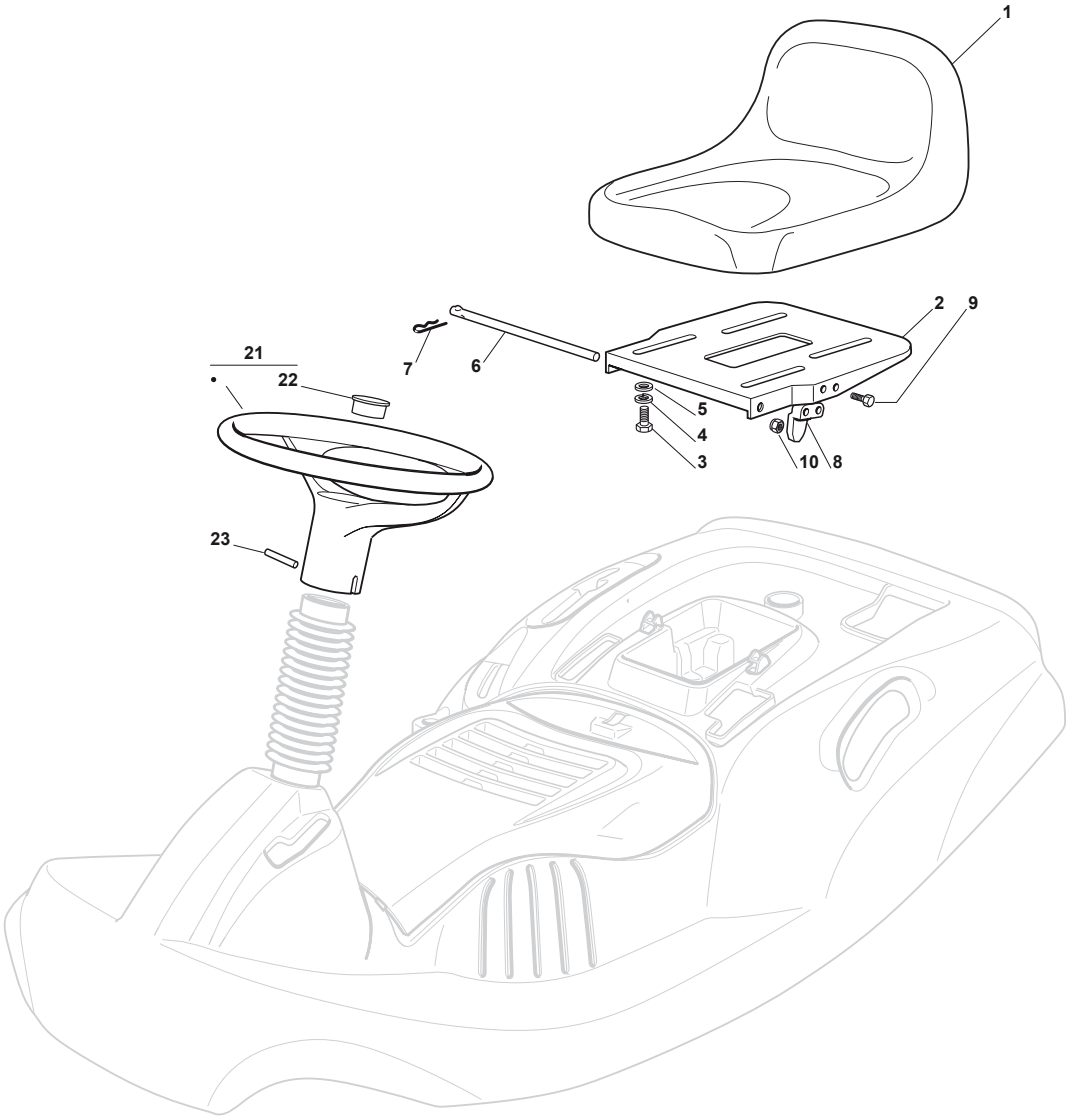
1
2
9
21
22
7
6
5
4
3
10
8
23

N.	CODE	Q.TY	DESCRITPION	DESCRITPION
1	125722470/0	1	Siege	Seat
2	27546039/1	1	Support	Support
3	12793101/0	4	Vis	Screw
4	12583500/0	4	Grower	Grower
5	12523060/0	4	Rondelle	Washer
6	27864052/0	1	Pivot	Pin
7	24487997/0	1	Goupille	Cotter Pin
8	27063021/1	1	Came	Cam
9	12789100/0	2	Vis	Screw
10	12154330/0	2	Ecrou	Nut
21	27961230/0	1	Volant	Steering Wheel
22	25120230/0	1	Bouchon	Cap
23	12620305/0	1	Goupille	Pin

© Copyright 2011 Global Garden Products