5

Starters

Current Briggs & Stratton engines use a side-pull or vertical-pull rewind starter that might be supplemented with a dc- or ac-starter motor. Formerly, some of the company's products were fitted with a spring-powered unit, which is discussed briefly at the end of this section.

Rewind starters

The *rewind starter,* also known as the *recoil starter*, was introduced by Jacobsen in 1928 and has since become standard for small engines. While the constructional details differ, rewind starters have the following basic components:

- Pressed steel or aluminum housing, which locates the starter center over the flywheel center.
- Recoil spring, one end of which is anchored to the housing; the other to the pulley. The spring mounts in a recess in the pulley or housing.
- Nylon starter cord, sized by diameter and length to the application and secured to the pulley at one end and the handle at the other.
- Pulley, also known as the sheave ("shiv"), located relative to the starter housing by tabs or a bushing.
- Clutch, which transfers starter torque to the flywheel and automatically disengages when the engine starts. Briggs starters use either a sprag or friction clutch.

Troubleshooting

This section details some of the more common failures.

Broken rope This is the most common failure and is often caused by the operator pulling too hard at the end of travel. Rope breakage might be abetted by a worn guide bushing (the ferrule that protects the rope from contact with the housing) or by a tendency of the engine to kick back during cranking.

Rope won't completely retract Some spring action is present, which might be frustrated by starter-to-flywheel misalignment or by loss of preload. With the rope extended and the blower-housing bolts loosened a few turns, strike the housing with the palm of your hand. If the rope retracts, misalignment was the problem and the housing can be secured. If repositioning the housing has no effect, the recoil spring should be replaced. It is possible to salvage tired springs by increasing the preload, but at the cost of reduced rope travel.

No spring action If the rope goes limp, the cause is almost certainly a broken spring.

Rope is hard to pull Check the starter-to-flywheel alignment as described previously. Other possibilities include abnormal engine friction or, if rope resistance seems to pulsate, a loose flywheel or rotary mower blade. Check the sheave-axle bearing on Eaton starters.

Starter slips, and fails to engage the flywheel This problem originates in the starter clutch and, on Eaton-pattern starters, almost certainly indicates a failed brake spring. Briggs clutches slip if extremely dirty.

Starter howls as engine runs This is the classic symptom of a dry clutch/crankshaft bearing on Briggs-pattern starters. Remove the blower housing and apply a few drops of oil to the crankshaft end.

Eaton-pattern, side-pull starter

Quantum, Europa, and the better engines generally use versions of the Eaton starter. An Eaton starter employs spring-loaded clutch dogs that cam into engagement against the flywheel hub inside diameter (ID). The starter assembly is generally secured to the blower housing with pop rivets, although some engine models use bolts (Fig. 5-1). In any event, replacement starter assemblies bolt into place using the existing mounting holes.

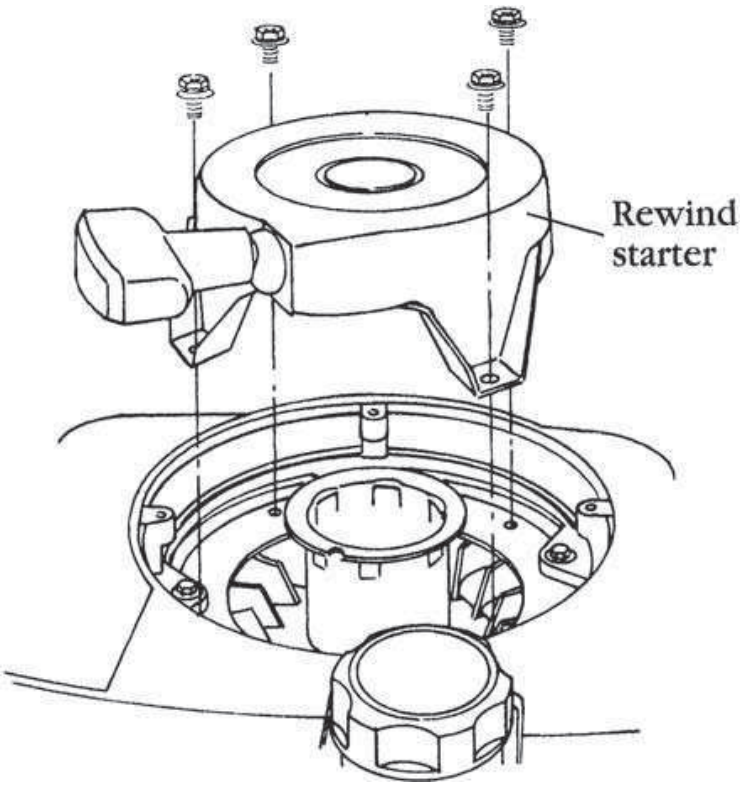

FIG. 5-1. *We will be seeing more Eaton starters as Briggs turns to outside vendors for components. While these starters are not identical to those used by other manufacturers, clutch parts can be purchased from Tecumseh dealers. This illustration does not show the plastic grass guard that mounts over the starter housing.*

Disarming

First release spring preload tension, which on Eaton starters is done by removing the handle and allowing the sheave to unwind in a controlled fashion. Brake the sheave with your thumbs. It is also helpful to count the number of sheave rotations from the point of full-rope retraction so that the same preload can be established upon assembly.

Warning: Even after preload has been dissipated, the spring remains confined in its housing under considerable tension. Wear safety glasses when servicing these starters.

Rope replacement

If the rope has parted, preload has already been lost. If the rope remains in one piece, untie the knot securing the handle. Allow the rope to fully retract, braking the sheave as described in the preceding paragraph.

Briggs & Stratton supplies precut and fused starter cords for the various engine models. If you purchase stranded nylon cord in bulk, replicate the original diameter (#4½ for 60000 through 120000; #5½ for 130000 and larger) and length. Fuse the cut ends in an open flame.

Warning: Fused rope ends retain enough heat to produce painful burns for several minutes after exposure to flame.

Follow this procedure:

1. Tie a square knot in one end of the rope (Fig. 5-2).

FIG. 5-2. *A figure-eight knot secures the rope to the sheave. Rope ends should be melted to prevent unraveling.* Briggs & Stratton Corp.

2. Using a screwdriver in the sheave slot, wind the spring clockwise (as viewed from the underside of the starter) until tight.
3. Allow the sheave to unwind enough to align the slot with the rope eyelet (Fig. 5-3).

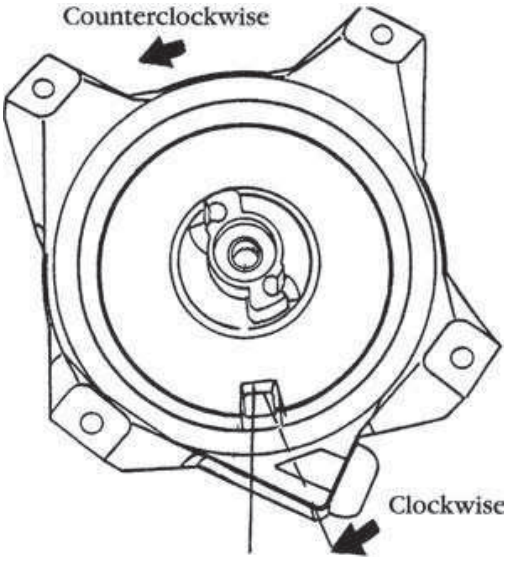

FIG. 5-3. *Turn the sheave counterclockwise to coil bind and back off far enough to align the rope cavity with the eyelet. This establishes preload for the Briggs-Eaton starters discussed here. If you are dealing with an unfamiliar starter, preload is the number of revolutions the sheave made after "swallowing" the rope. If after assembly, the rope fails to retract smartly, add a revolution or so of preload. If the spring coil binds near the end of rope travel, release some of the preload.*

4. Insert the unknotted end of the rope into the slot and through the eyelet (Fig. 5-4).
5. Tie a temporary knot in the rope or lock the sheave with Vise-Grip pliers (Fig. 5-5).
6. Install the handle and secure with a knot. Release the sheave and test starter action.

Clutch

Two spring-loaded dogs inside a pressed aluminum retainer transmit starting torque to the flywheel hub. A compression pin or screw secures the retainer to the underside of the sheave and the sheave to its axle. Note that some retainer screws have left-hand threads.

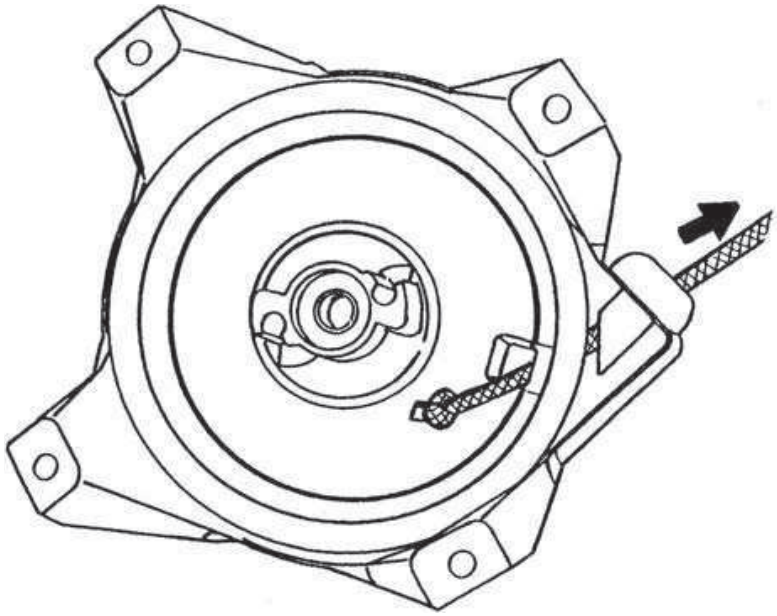

FIG. 5-4. *Thread the rope through the eyelet, or bushing, and seat the knot in the sheave cavity. To avoid fighting the spring while tying on the handle, clamp the sheave to the housing with Vise-Grips.* Briggs & Stratton Corp.

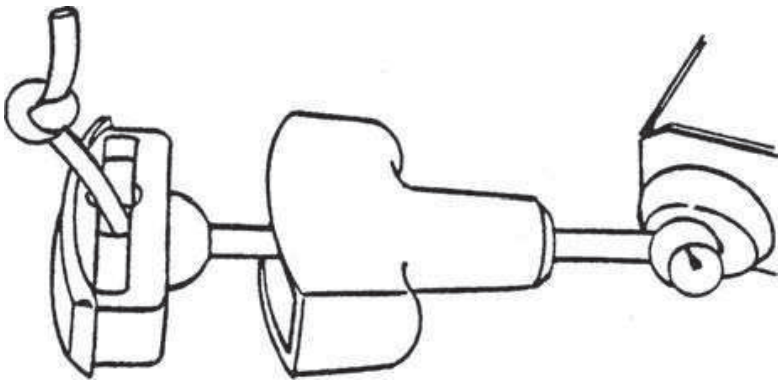

FIG. 5-5. *Knot the rope as shown at the handle.* Briggs & Stratton Corp.

Warning: Wear eye protection when servicing rewind starters, particularly during and subsequent to removal of the retainer fastener. All that holds the main spring captive is a shallow recess in the upper side of the sheave.

Engine model	Clutch retainer fastener	Torque
95700, 96700 (2-cyc)	Hex-head, LH thread	30 lb./in.
99700 (Europa)	Pin	
104700 (OHV)	Phillips, RH thread	70 lb./in.
120000 (Quantum)	Pin	

Figures 5-6A and 5-6B illustrate these arrangements. Note that the fastener preloads the brake spring against the retainer. Spring tension causes the retainer and sheave to turn together as an assembly during the first few degrees of sheave rotation. Further movement of the retainer is then blocked by the dogs that, at this point, grip the flywheel hub in full extension. Continued rotation of the sheave exerts a steady drag on the retainer to hold the dogs in engagement. When the starter cord is released, the sheave rewinds and drags the retainer with it for a fraction of a turn, just

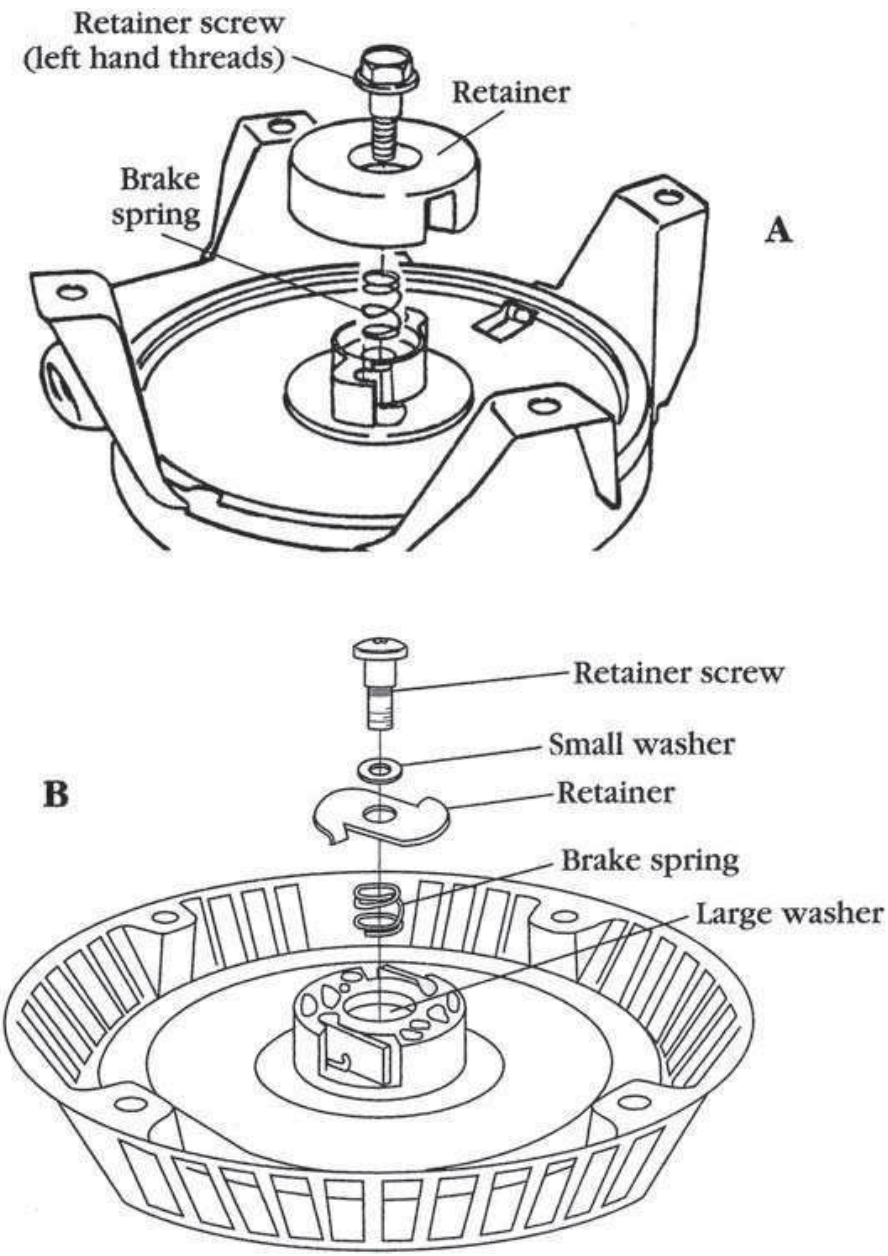

FIG. 5-6. *Eaton starters are held together with a screw (A) or throwaway compression pin (B). Washer sequence varies with starter model but all employ a coil spring as a friction generator.* Briggs & Stratton Corp.

enough to back out the dogs and release the flywheel. In practical translation, this means:

- Brake springs are the most vulnerable part of the assembly.
- A loose retainer pin or screw dissipates brake spring preload, resulting in starter slip.
- Retainers undergo severe wear at the brake spring and dog contact points.
- Bent or distorted dog springs should be replaced.
- Lubrication is an enemy.

Use a punch to drive out the compression pin from the out-board side of the starter housing to the engine side. In some cases, a decorative decal must be peeled from the starter housing to gain access to the pin. Support the housing and sheave with PN 19227 or a short length of pipe placed vertically beneath it (Fig. 5-7). From the engine side, hammer or press in a new replacement pin and install spring and washers. Seat at the original depth.

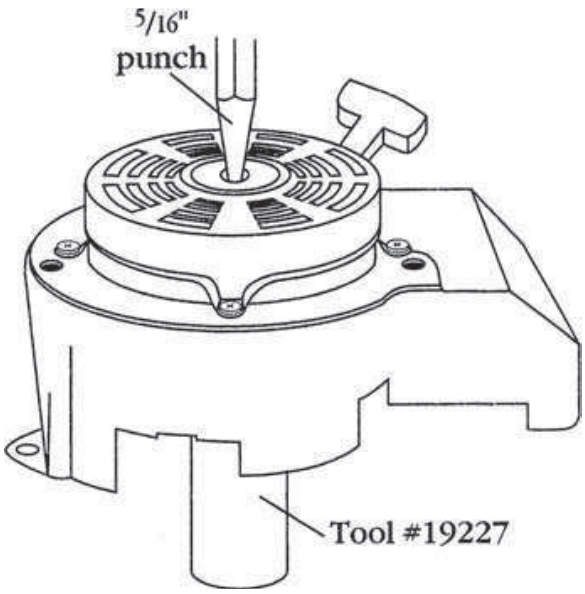

FIG. 5-7. *PN 19227 is a hollow cylinder that allows the pin to drop while keeping the sheave on its axle and the main spring contained. A piece of 3-in. pipe can substitute.* Briggs & Stratton Corp.

Spring & sheave

The spring lives in a recess in the sheave between the sheave and underside of the starter housing. One end of the spring anchors to the sheave, the other to the housing.

Springs used for engine Models 104700 overhead-valve (OHV) and 120000 (Quantum) are considered an integral part of the sheave and should not be separated from it.

99700 and more recent models have replaceable springs. Grasp the spring with long-nosed pliers and carefully lift it out of the sheave (Fig. 5-8) and release it inside of the starter housing (Fig. 5-9), which acts as a kind of cage.

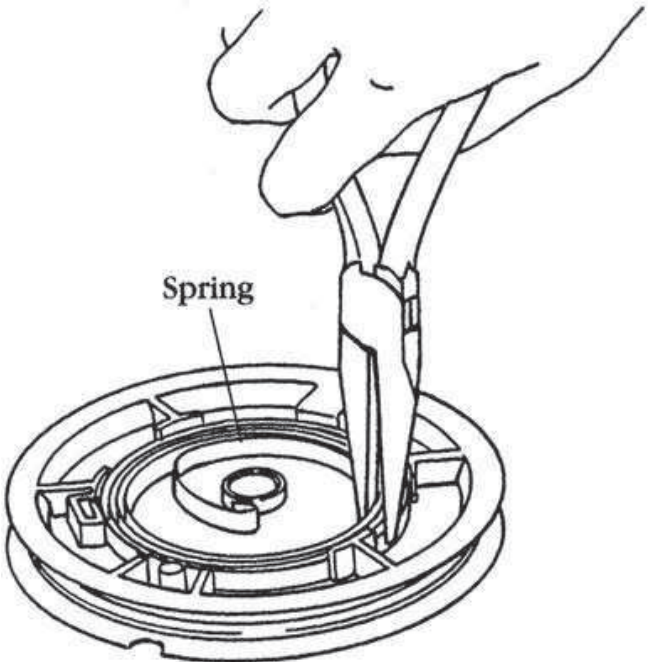

FIG. 5-8. *Grasp the spring with long-nosed pliers and carefully lift it out of the sheave recess on engine models with replaceable springs.* Briggs & Stratton Corp.

Warning: Wear safety glasses and long sleeves and gloves.

Inspect the sheave for cracks in the hub and damage to the spring anchor. Plastic sheathes require no lubrication, although a bit of oil on the axle helps prevent rust.

Replacement springs are packaged in a plastic retainer for ease of handling. A small dab of grease is all the lubrication required. Insert the outer spring end in the slot provided and, holding the coils with long-nosed pliers, cut the retainer loose (Fig. 5-10). Reinstalling the original spring, which does not have a retainer, is a matter of anchoring the outer end and laying the spring down counterclockwise, a coil at a time (Fig. 5-11). Install the sheave on the axle and rotate it counterclockwise to engage the anchor.

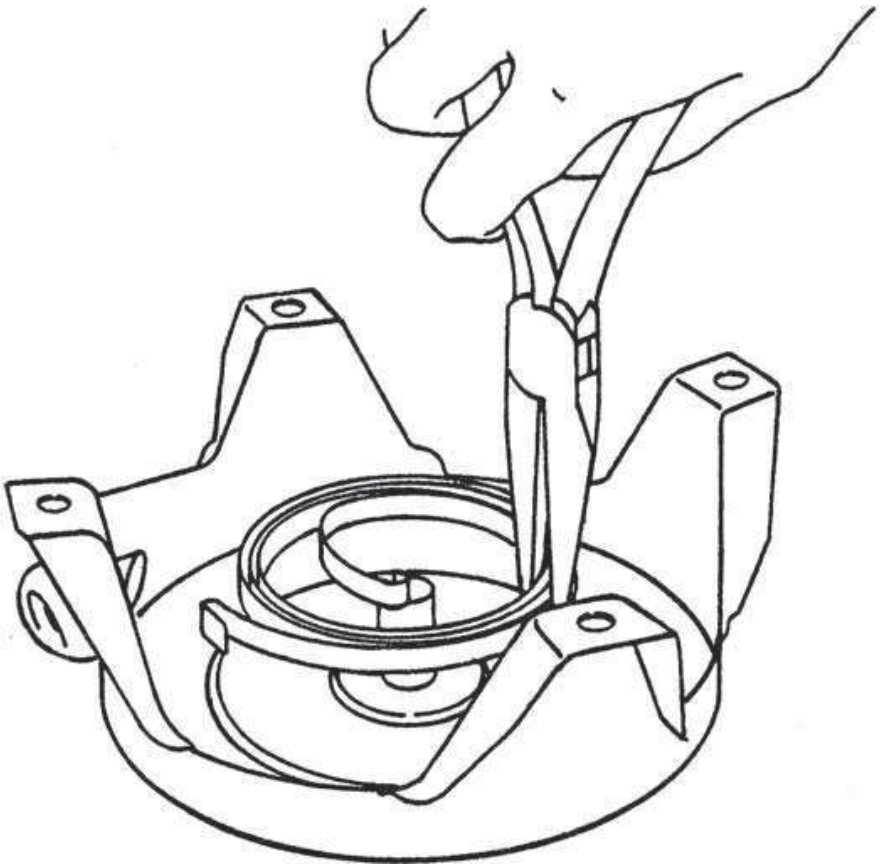

FIG. 5-9. *Release the spring inside of the starter housing.* Briggs & Stratton Corp.

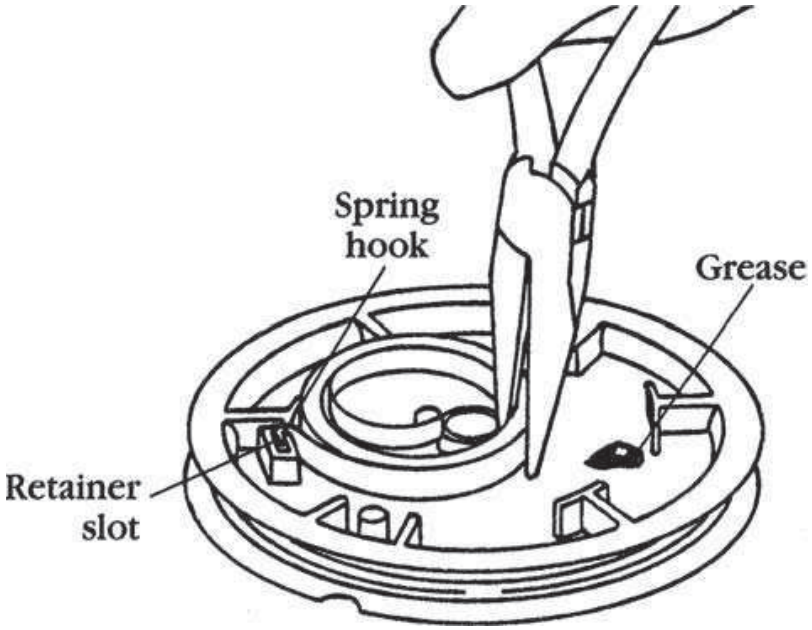

FIG. 5-10. *New springs are first anchored and then released by cutting the retainer band.* Briggs & Stratton Corp.

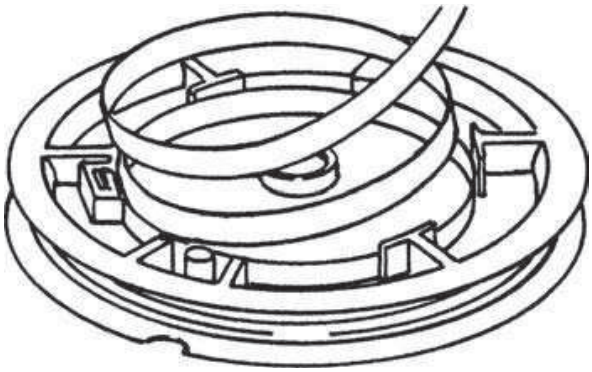

FIG. 5-11. *Used springs can be wound in by hand.* Briggs & Stratton Corp.

Briggs & Stratton starters

The Briggs side-pull starter continues to be specified for many single-cylinder models. Unlike other rewind starters, it is integral with the blower housing and drives through a sprag, or rachet-type, clutch.

Sprag clutch Recoil and impulse starters drive through a sprag clutch that doubles as the flywheel nut. The clutch housing (Fig. 5-12) threads over the crankshaft. The sprag (ratchet in the drawing) is supported by a bushing on the crankshaft stub. Its outside end mates with the starter pulley, and its lower, or inside, end rides against four or six ball bearings in the starter housing. When rotated by the starter pulley, the sprag traps a ball bearing between it and the clutch housing, locking the starter to the crankshaft. Once the engine catches, the ball bearing releases and the sprag idles on the bushing.

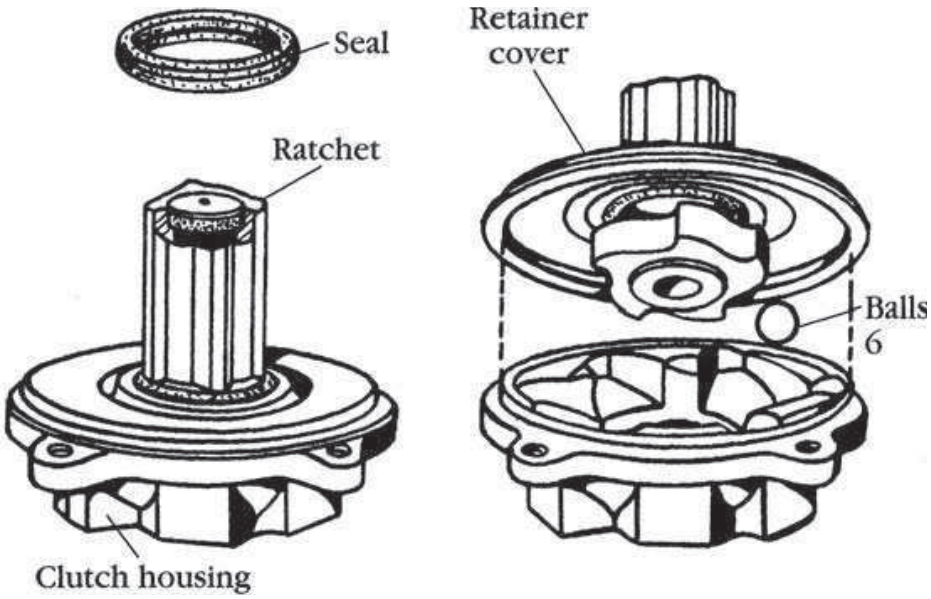

FIG. 5-12. *The Current production sprag clutch.* International Harvester Corp.

To service the clutch, remove the engine shroud and the screen, which is mounted to the clutch housing by four self-threading screws. Disconnect and ground the spark-plug lead to prevent accidental starting. Secure the flywheel with a strap wrench or a Briggs & Stratton holding fixture. Unthread the clutch assembly using factory tool PN 19161 or 19114. If this tool is not available, the assembly can be loosened with a hammer and a block of soft wood. Some damage to the screen lugs is inevitable but is less than fatal if distributed evenly to all four lugs. A spring washer fits under the clutch assembly.

On early models, the retainer cover was secured with a spring wire; on late models, the cover must be pried off. Clean the sprag, clutch housing, and ball bearings in solvent. Some deformation of the clutch housing is normal. Wear on the tip of the sprag, the part that makes contact with the bearings, can cause the clutch to slip. Reassemble these parts dry, without lubricant, and lightly oil the bushing. Install the spring washer and torque to specifications in Table 5-1.

Table 5-1
Clutch housing torque limits

Cast-iron series	**Torque (ft-lb)**
6B, 6000, 8B, 80000, 82000, 92000, 110000	55
100000, 130000	60
140000, 170000, 1717000, 190000, 191700, 251000	65
Aluminum series	
19, 190000, 200000	115

Horizontal pull starter To dismantle the starter, remove the shroud and place the assembly upside down on a bench (Fig. 5-13). Cut the rope at the sheave knot and extract it. Use a pair of pliers to pull the main spring out of the housing as far as it will come (Fig. 5-14). The purpose is to bind the spring so that it will not "explode" when the sheave is detached. For further protection, wear safety glasses. Carefully straighten the sheave tangs. Withdraw the sheave, twisting it slightly to disengage the spring. Clean the metal parts in solvent and inspect for damage.

Secure the blower shroud to the workbench with several large nails or hold the shroud lightly in a vise. Lightly grease the spring and attach it to the sheave. Thread the free end out through the anchor slot in the shroud. The hole in the sheave measures ¾ in. square. A 6 in. length of a 1 × 1 or the male end of a ¾-in. drive-extension bar can be used to wind the sheave. With the tangs bent down into light rubbing contact, rotate the sheave and

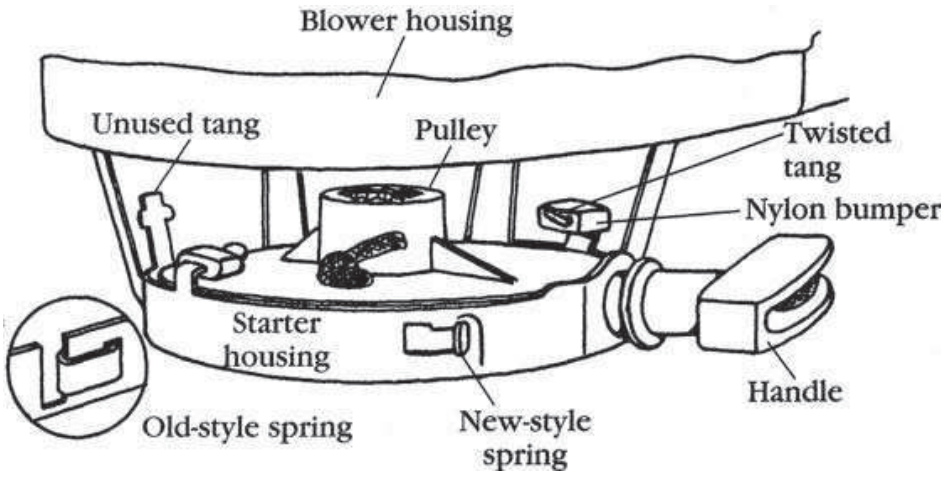

FIG. 5-13. *Some models employ an insert at the housing spring-anchor slot.* Briggs & Stratton Corp.

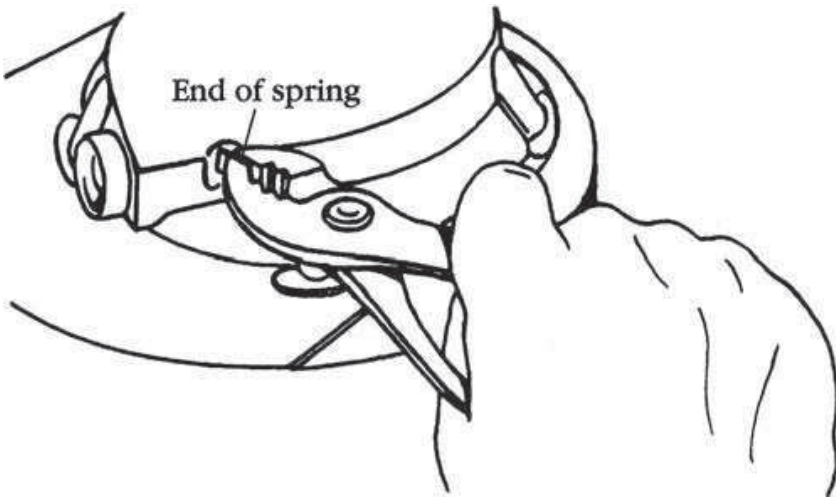

FIG. 5-14. *Disarm the spring before disassembly.* Briggs & Stratton Corp.

wind the spring tight. With your free hand, guide the spring through the slot in the shroud. Press the notched end of the spring into engagement with the anchor slot.

Without releasing the sheave, thread the rope into it. A length of piano wire can be used as a pilot. Fish the end of the rope through the knot hole, tie it, and seal the frayed edges with a match. Push the knot down into the hole for clearance. The process is the same with new-style pulleys except there is no lug to frustrate your work.

Secure the handle with a figure eight knot, leaving about 3/4 in. of rope beyond the knot. Seal the end with heat and slip the handle pin through one of the knot loops.

Release the spring in a controlled manner and allow the rope to wind. Bend the lugs so that the nylon bumpers are 1/16 in. below the sheave (the

bumpers were against the sheave during winding for better control). Install the shroud assembly on the engine, centering it over the flywheel. Test the starter. If it is slow to retract or binds, loosen the shroud and reposition it.

Vertical pull starter The vertical pull starter is a convenience on vertical crankshaft engines because it eliminates the need to crouch alongside the engine to start it. This starter is considered a safety feature on rotary lawnmowers. Pulling on the rope sends a nylon gear into engagement with the ring gear on the underside of the flywheel. The nylon gear moves on a thread by virtue of a friction spring and link (an arrangement reminiscent of that used on bicycle coaster brakes). Once the engine fires, the gear retracts back down the thread.

Warning: Wear safety glasses when servicing this and other starters.

The main spring is under some tension. Disarm the spring by lifting the rope out of the sheave groove and winding the sheave, together with the freed section of rope, several turns counterclockwise (Fig. 5-15). When you are finished, there should be no tension on the sheave and approximately 12 in. of rope should be free. Observe the warning stamped on the plastic starter cover and, using a screwdriver, gently pry the cover off. Do not pull on the rope with the cover disengaged.

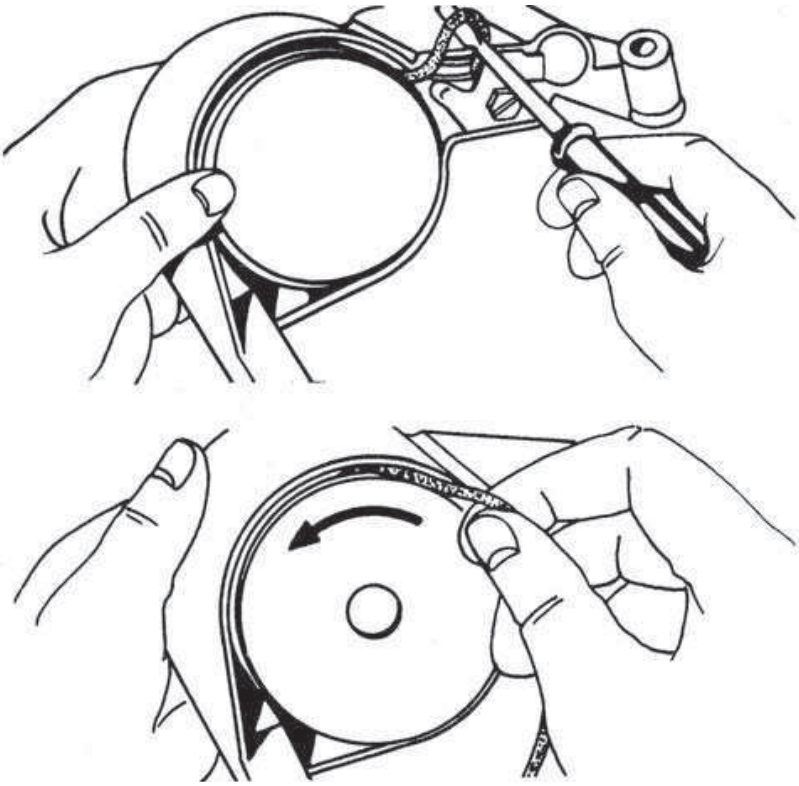

FIG. 5-15. *Disarm the Briggs vertical pull starter by lifting a foot or so of rope out of the pulley groove.*

Remove the anchor bolt and anchor and note how the spring mates with it (Fig. 5-16). If the spring is to be replaced, carefully work it out of the housing. Remove the rope guide and observe the position of the link (Fig. 5-17) for assembly reference. Using a piece of piano wire in conjunction with long-nosed pliers, pull the rope far enough out of the sheave to cut the knot. Clean mechanical parts in solvent. The friction spring and link are the most vulnerable elements in this mechanism. See that the link and spring assembly move the drive gear to its extremes of travel. If there is any hesitation, replace these parts.

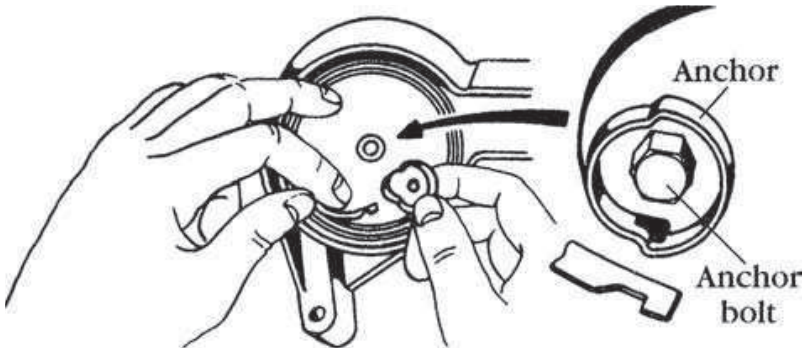

FIG. 5-16. *Remove the anchor bolt and spring.* Briggs & Stratton Corp.

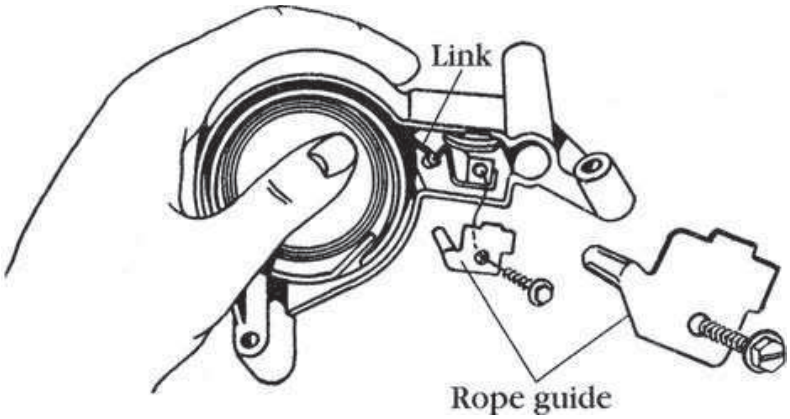

FIG. 5-17. *Observe the position of the friction link before disassembly.* Briggs & Stratton Corp.

Begin reassembly by installing the spring in its housing. Slip one end into the retainer slot and wind the spring counterclockwise (Fig. 5-18). Using a length of piano wire or a jeweler's screwdriver, snake one end of the rope into the pulley. Extract the end of the rope from behind the sheave and tie a small, hard knot. Space is critical. No more than 1/16 of an inch of rope should extend beyond the knot. Melt the ends with a flame and wipe down the melted fibers with a shop rag to reduce their diameter. Pull the rope tight and check that the knot clears the threads.

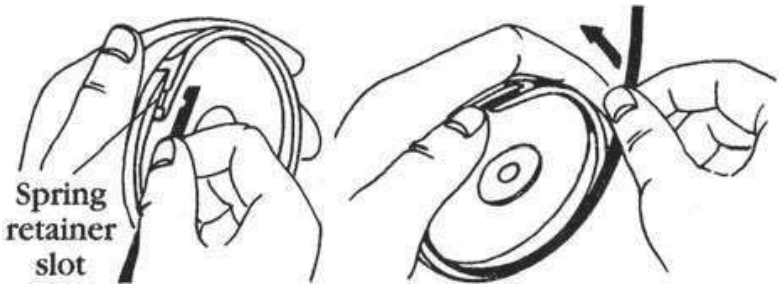

FIG. 5-18. *To install the spring, anchor it in the retainer slot and wind counterclockwise.* Briggs & Stratton Corp.

Install the rope guide with the link positioned as it was originally found (Fig. 5-19). Wind the spring counterclockwise with your thumbs to retract the rope (Fig. 5-20). Once the handle butts against the starter case, secure the spring anchor with 80 to 90 lb/in. of torque. Lightly lubricate the spring with motor oil.

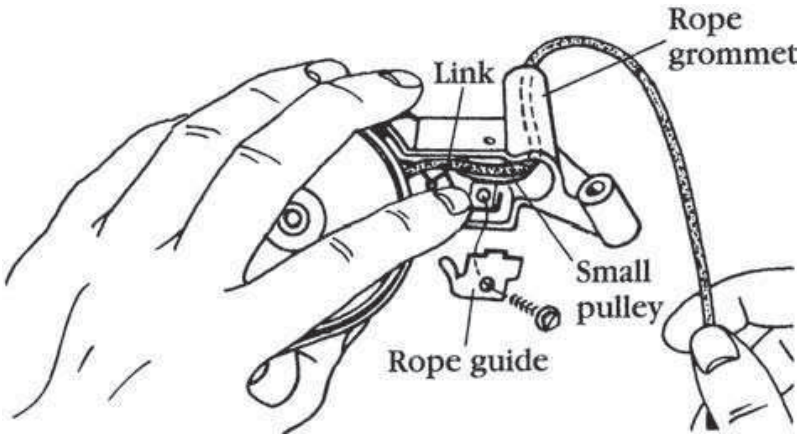

FIG. 5-19. *Install the friction link behind the rope guide.* Briggs & Stratton Corp.

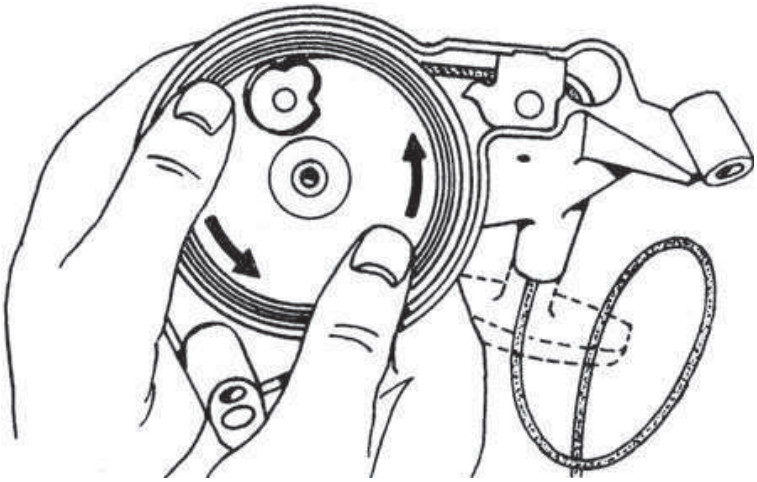

FIG. 5-20. *Wind the spring counterclockwise to retract the rope.* Briggs & Stratton Corp.

Snap the starter cover into place and disengage approximately 12 in. of rope from the sheave. Give the rope and sheave two or three clockwise turns to preload the main spring and to assure that the rope will be rewound smartly (Fig. 5- 21).

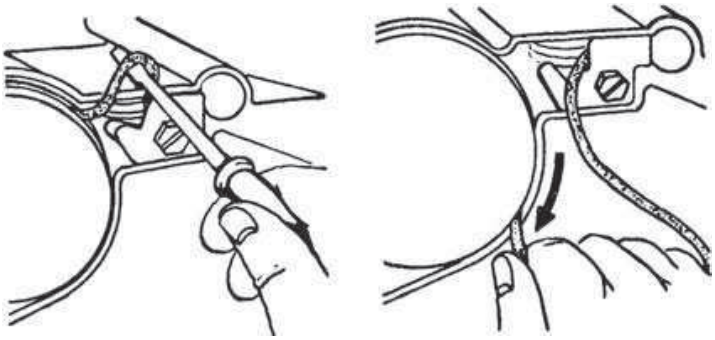

FIG. 5-21. *Preload the spring two or three rotations.* Briggs & Stratton Corp.

Impulse starters

The spring-powered impulse starter should not be given new life from repairs. These devices were inefficient, generally unreliable, and quite dangerous. In most cases, a B & S side-pull rewind starter can be easily substituted. However, the impulse starter must be at least provisionally disarmed.

Release tension by placing the control knob or remote-control lever in the "start" position. If the engine is locked and the starter fails to unwind, turn the knob or lever to the "crank" position. Get a strong grip on the crank handle with one hand and remove the Phillips screw at the top of the assembly.

Warning: If unsecured, the crank handle can spin with enough force to break an arm.

Dispose of the old starter without dismantling it further or handling the parts more than necessary. The main spring retains a serious potential for bodily damage.

Starter motors—various models

In recent years, Briggs has used a variety of starter motors, manufactured internally and purchased from second parties. Both 12 Vdc and 120 Vac models are supplied. The following discussion covers the more popular models but is not all-inclusive.

Does not crank	low battery; low line voltage (120 Vac); high resistance connection; open starter switch; heavy load; defective motor or rectifier (120 Vac)
Cranks slowly	low battery; low line voltage (120 Vac); high resistance connection; worn motor bearings; worn or sticking brushes; heavy load

Figure 5-22 illustrates three starter motors available for the 140000-, 170000-, and 190000-series engines. These motors are typical of all gear-driven types of motors.

Briggs & Stratton suggests two test parameters, no-load rpm, and no-load current draw, for the motors that dealer mechanics service. To perform these tests, you will need a hand-held tachometer, an ammeter, and a power supply. Depending on the starter motor, the power supply is a fully charged 6 V or 12 V lead-acid battery or 12 V Nicad battery, or a 120 Vac source. The current readings in Table 5-2 are steady draw readings—disregard initial surges.

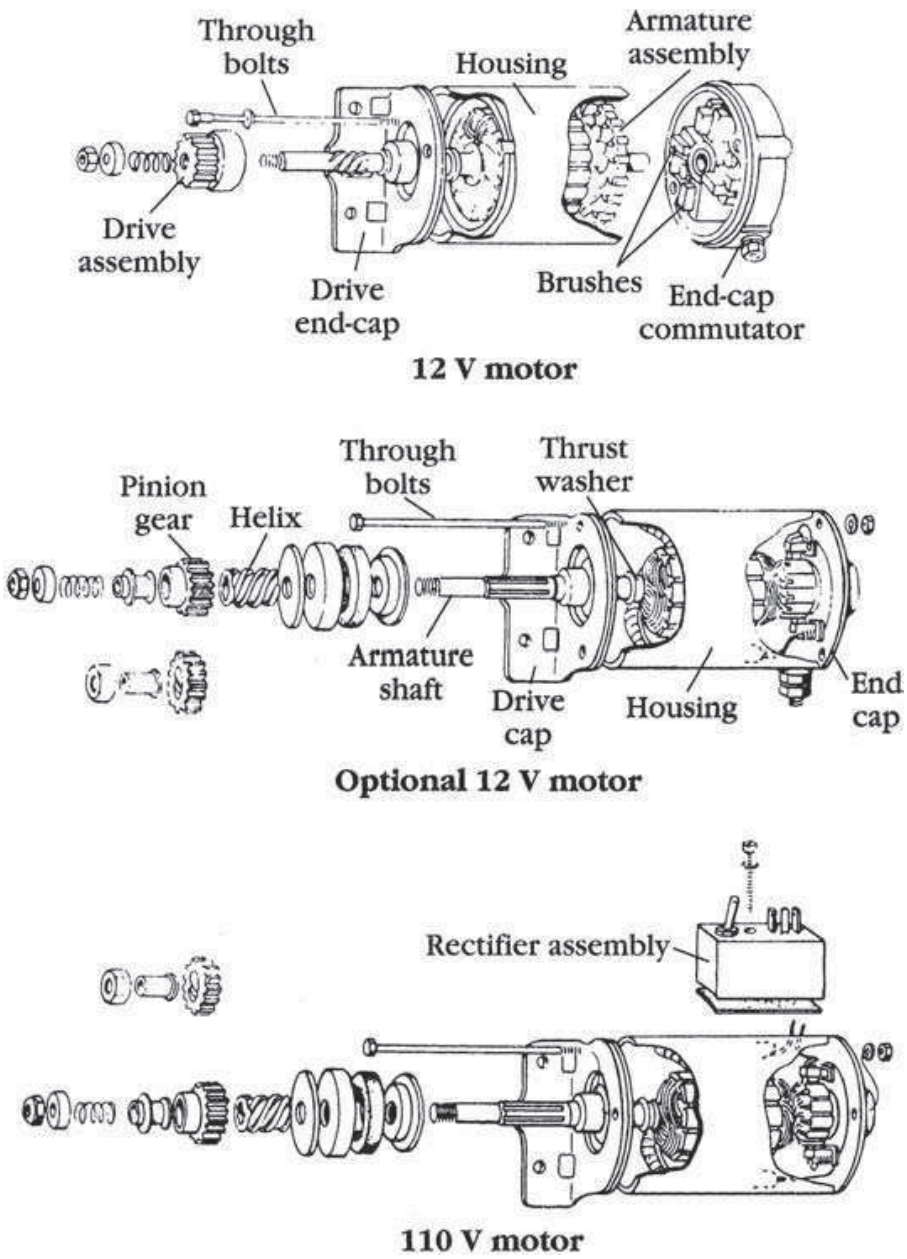

FIG. 5-22. *Typical starter motors.* Briggs & Stratton Corp.

Table 5-2
Steady draw current ratings

Motor	Engine model	Minimum (rpm)	Maximum current draw	Power supply
12 Vdc geared	140000, 170000, 190000	5000	25.0 A	6 V battery
12 Vdc geared (American Bosch No. SMH 12A11)	140000, 170000, 190000	4800	16.0 A	12 V battery
110 Vac geared	140000, 170000, 190000	5200	3.5 A	110 Vac
12 Vdc geared	130000	5600	6.0 A	12 V battery
110 Vac geared	130000	8300	1.5 A	110 Vac
12 Vac geared	300400, 320400	5500	60.0 A	12 V battery
12 Vdc geared (Nicad)	92000, 110900	1000	3.5 A	12 V Nicad battery

Mark the end cap and motor frame for assembly reference and remove the two through-bolts that secure the cap to the frame. Take off the brush cover and cap. The armature can be withdrawn from the drive side with the pulley still attached. Starter motor failure can be traced to:

- binding (scored or dry) armature shaft bearings
- worn armature shaft bearings
- shorted, opened, or grounded armature
- shorted, opened, or grounded field
- brushes worn to half or less of their original length
- brushes sticking in their holders.

Reddish brown discolorations on the commutator bars are normal and mean that the brushes have seated. Burned commutator bars signal a shorted winding. Glaze and minor imperfections can be removed with number 00 sandpaper as shown in Fig. 5-23. Severe out-of-round, deep pits, or scores should be corrected with a lathe. After any of these operations, cut

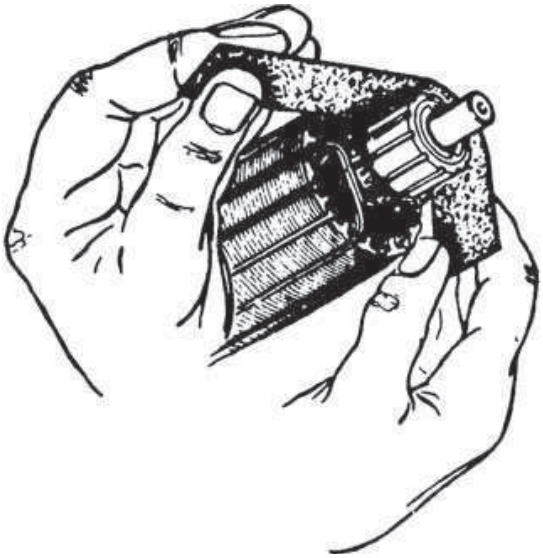

FIG. 5-23. *Cleaning the commutator.*
Tecumseh Products Co.

down the mica with a tool designed for this purpose, or with a narrow, flat-edged jeweler's file (Fig. 5-24). Polish the commutator to remove burrs and clear the filings with compressed air.

Bearings are the next most likely area of failure. The starter might turn freely by hand, but when engaged against the flywheel groan through a revolution or so, and then bind.

Drive out the old bushings, being careful not to score the bearing bosses, and drive in new ones to the depth of the originals. Bushings in motor end covers can be removed by any of several methods. A small chisel can be used to split the bushing. American Bosch end-cover bushings have a flange

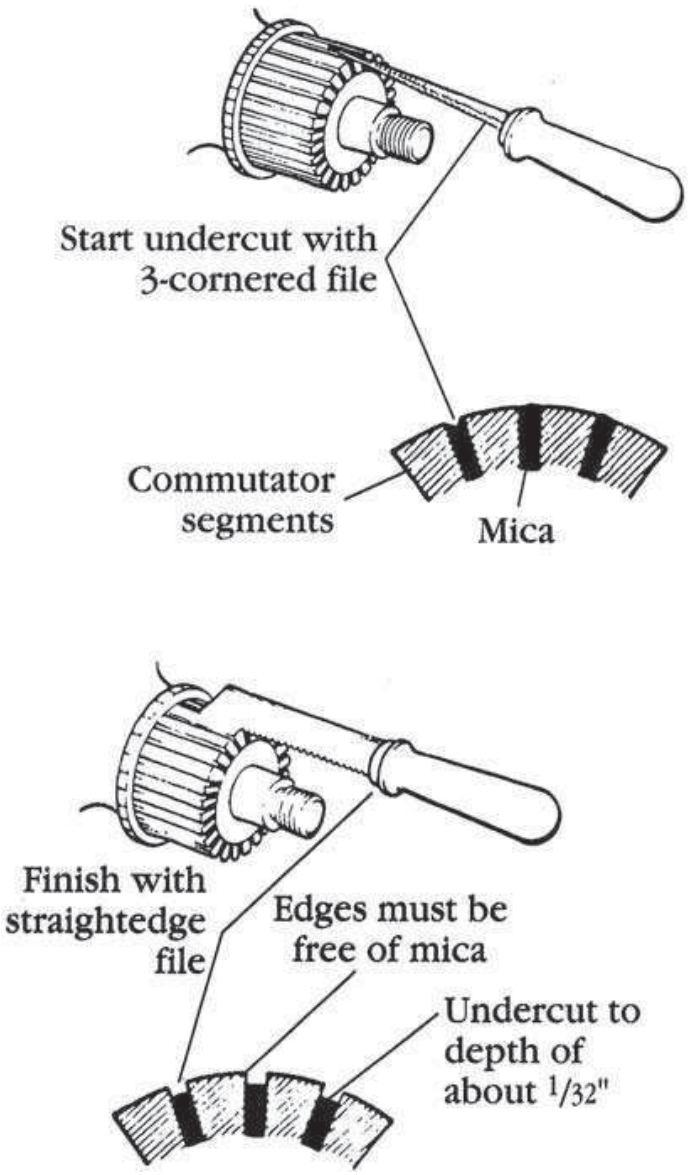

FIG. 5-24. *Undercutting the mica.* Kohler of Kohler.

to accept thrust loads that can be used as a purchase point to collapse the bushing inward. The neatest technique is to pack the boss with heavy grease, then ram the bushing out with a punch that matches the diameter of the motor shaft. A sharp hammer blow will lift the bushing by hydraulic pressure.

The armature can develop shorts. Check for shorts between the shaft and armature with a 120 Vac test lamp. All iron and steel parts must be electrically isolated from nonferrous (brass or copper) parts. Check adjacent commutator bars by the same method. Handle the 120 Vac probes with extreme caution—holding one in each hand means that an electric current could pass through your vulnerable thorax.

Internal winding-to-winding shorts can be detected with a growler. These tools are fairly expensive to buy, but a few autoparts houses keep one for customer use. You can build one around the core of a television power supply transformer.

If one of the armature windings is shorted, a hacksaw blade will vibrate when placed over the affected armature segment (Fig. 5-25). An open winding will generate sparks between the blade and adjacent commutator segments. Unless the damage is visible, such as a broken connection between the armature and a commutator bar, there is no practical way to repair an armature. Rewinding costs more than a replacement.

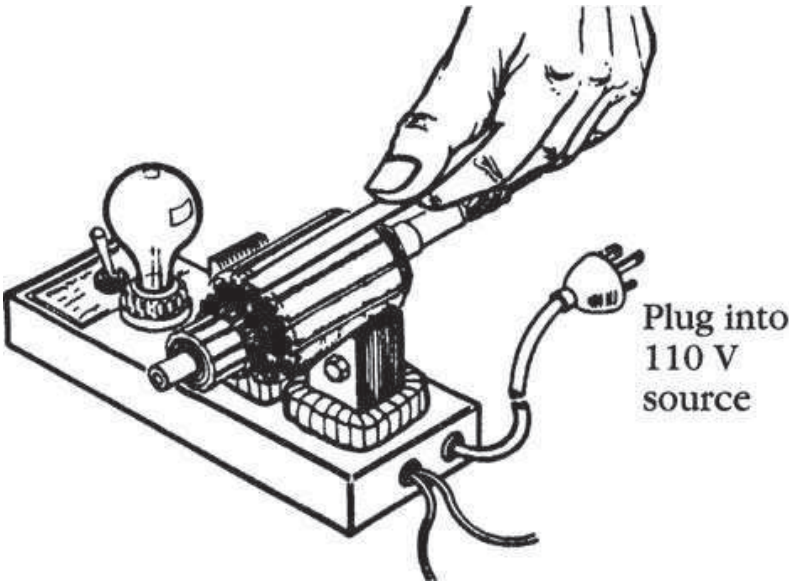

FIG. 5-25. *Checking for internal (winding-to-winding) shorts with a growler and hacksaw blade.* Tecumseh Products Co.

American Bosch motors use permanent magnetic fields that require no service under normal circumstances. Arc welding on adjacent parts or extreme vibration can weaken the magnets. Few shops have the necessary equipment to "recharge" magnets and the fields must be replaced.

Brushes must be at least half their original length to maintain pressure against the commutator bars. One brush or brush set should be grounded to the frame, while the remaining brush or brush set connects to the armature. The brushes should be free to move in their holders, and the assembly must be free of carbon dust and oil deposits. In most cases, the brushes must be "shoe-horned" over the commutator with a homemade tool (Fig. 5-26).

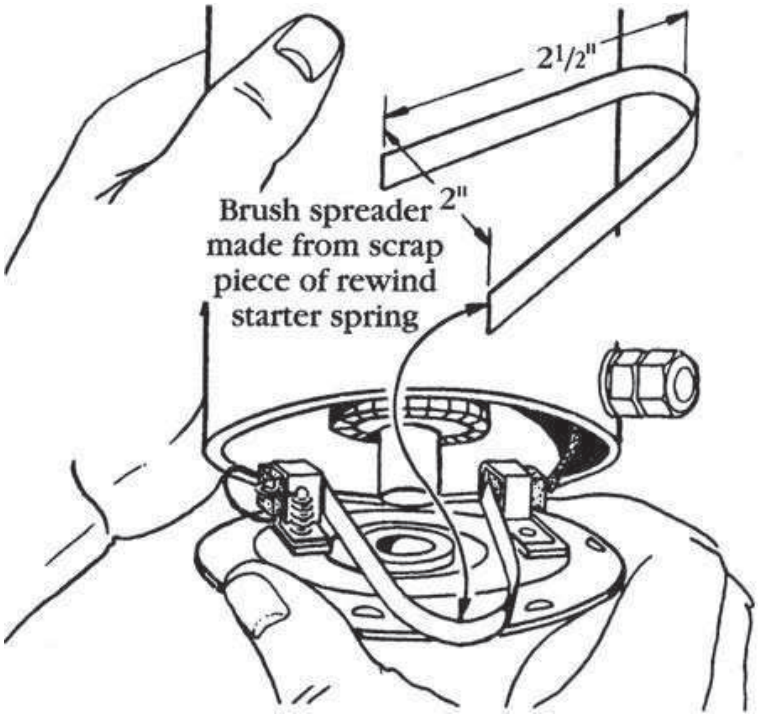

FIG. 5-26. *A homemade tool used to overcome brush-spring tension during reassembly.* Briggs & Stratton Corp.